FORD MOTOR COMPANY LTD.
PARTS DIVISION - AVELEY DEPOT

SOUTH OCKENDON, ROMFORD, ESSEX ENGLAND

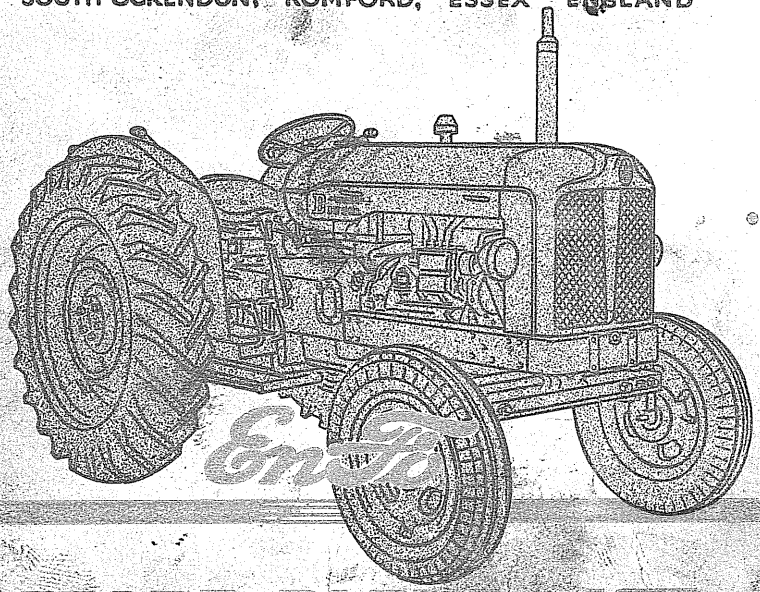

SPARE PARTS LIST

for

FORDSON MAJOR TRACTOR

OWNERS EDITION

COMPLETELY ILLUSTRATED

1952-57

Cammann,
Nordburg

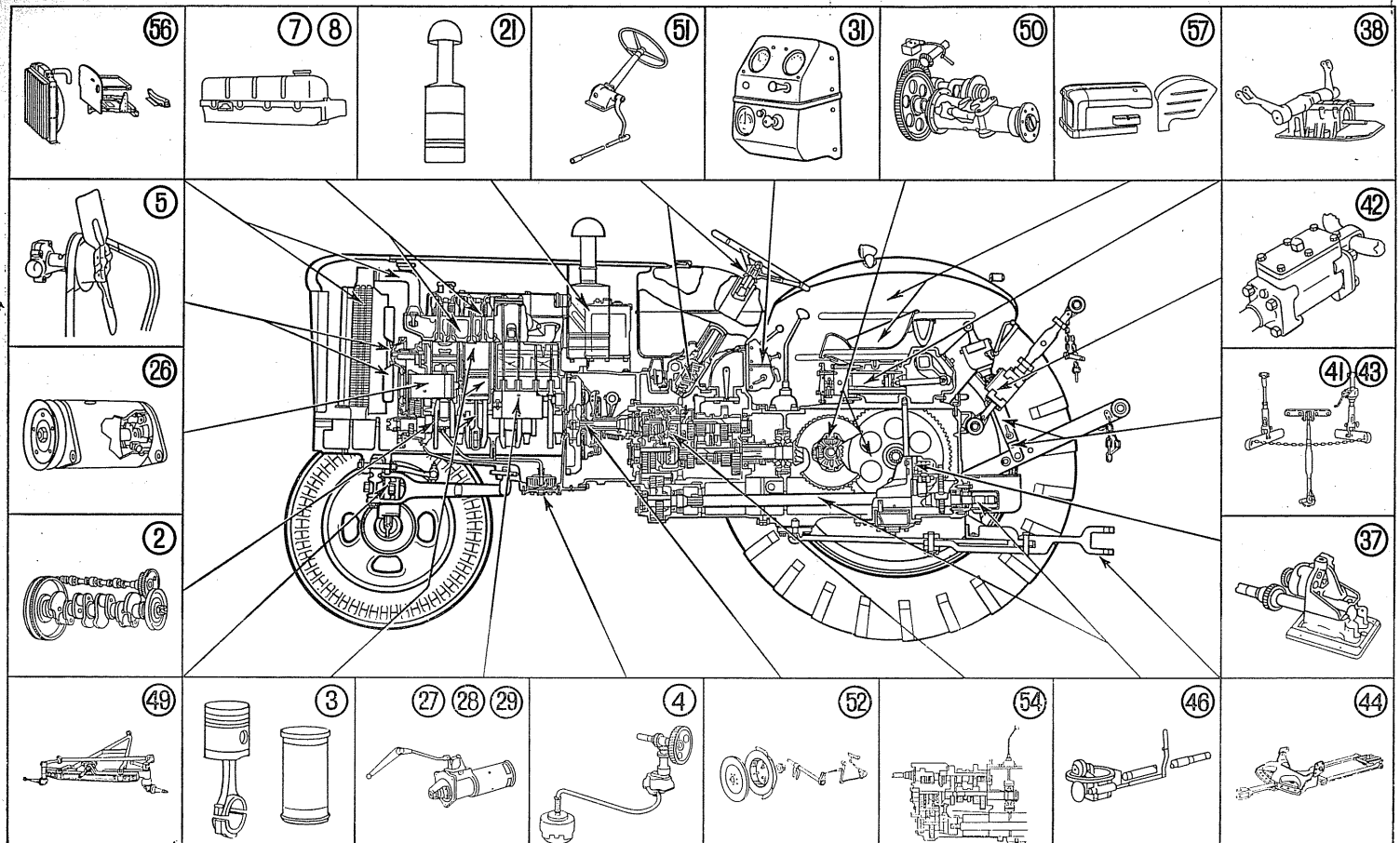
56
7
8
21
51
31
50
57
38
5
42
26
41
43
2
37
49
3
27
28
29
4
52
54
46
44

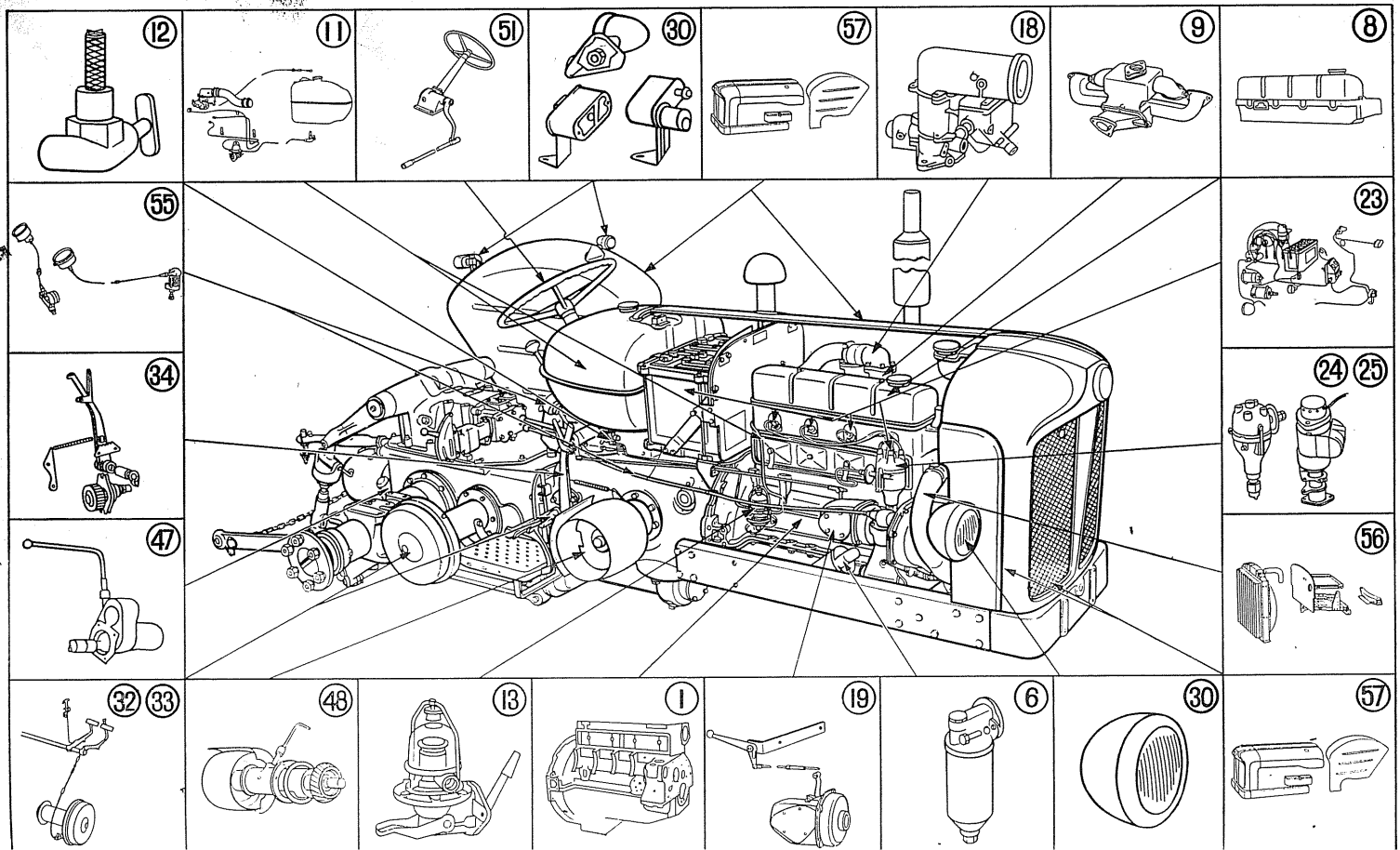
12
11
51
30
57
18
9
8
55
23
34
24
25
47
56
32
33
48
13
1
19
6
30
57

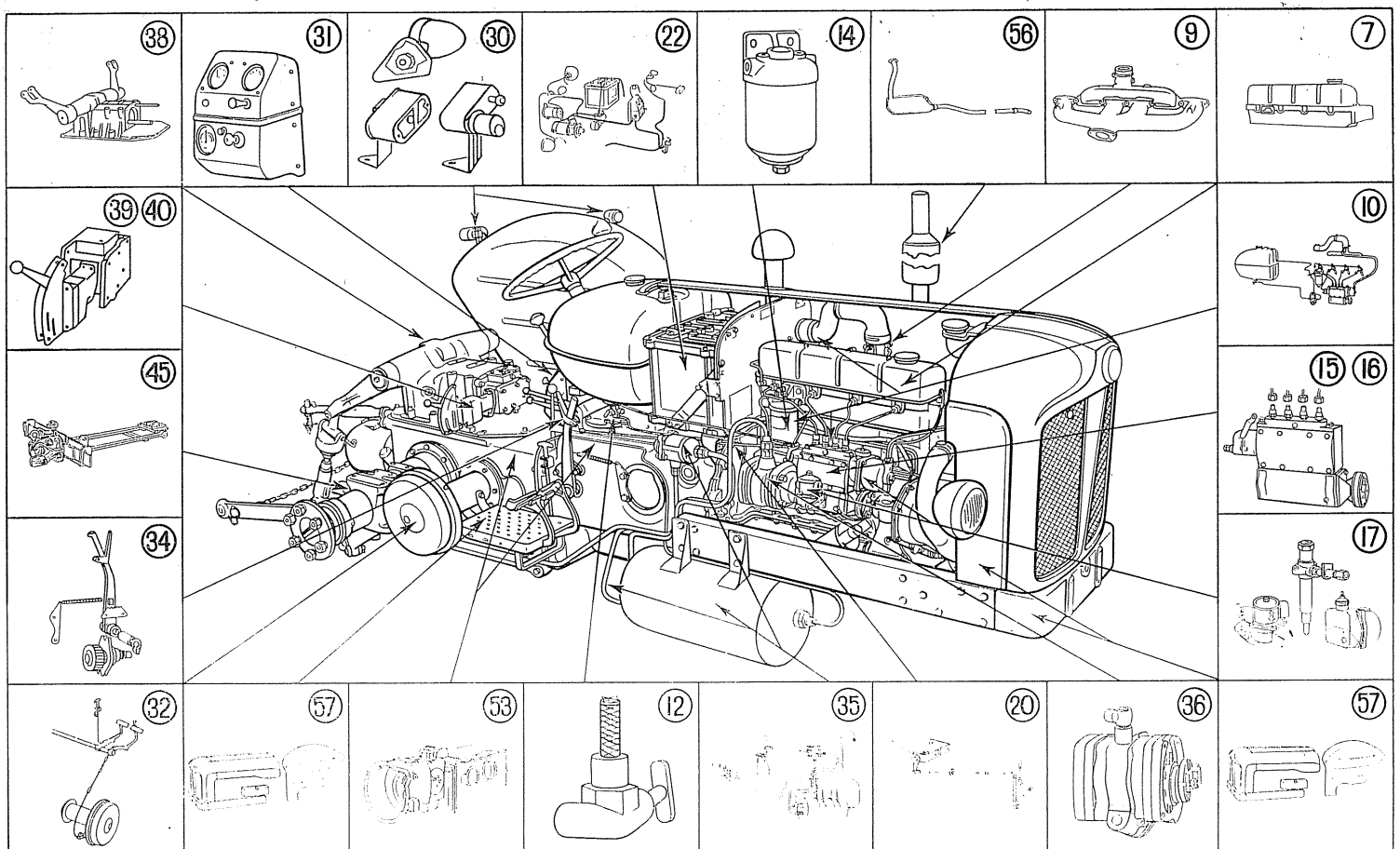
38
31
30
22
14
56
9
7
39
40
10
45
15
16
34
17
32
57
53
12
35
20
36
57

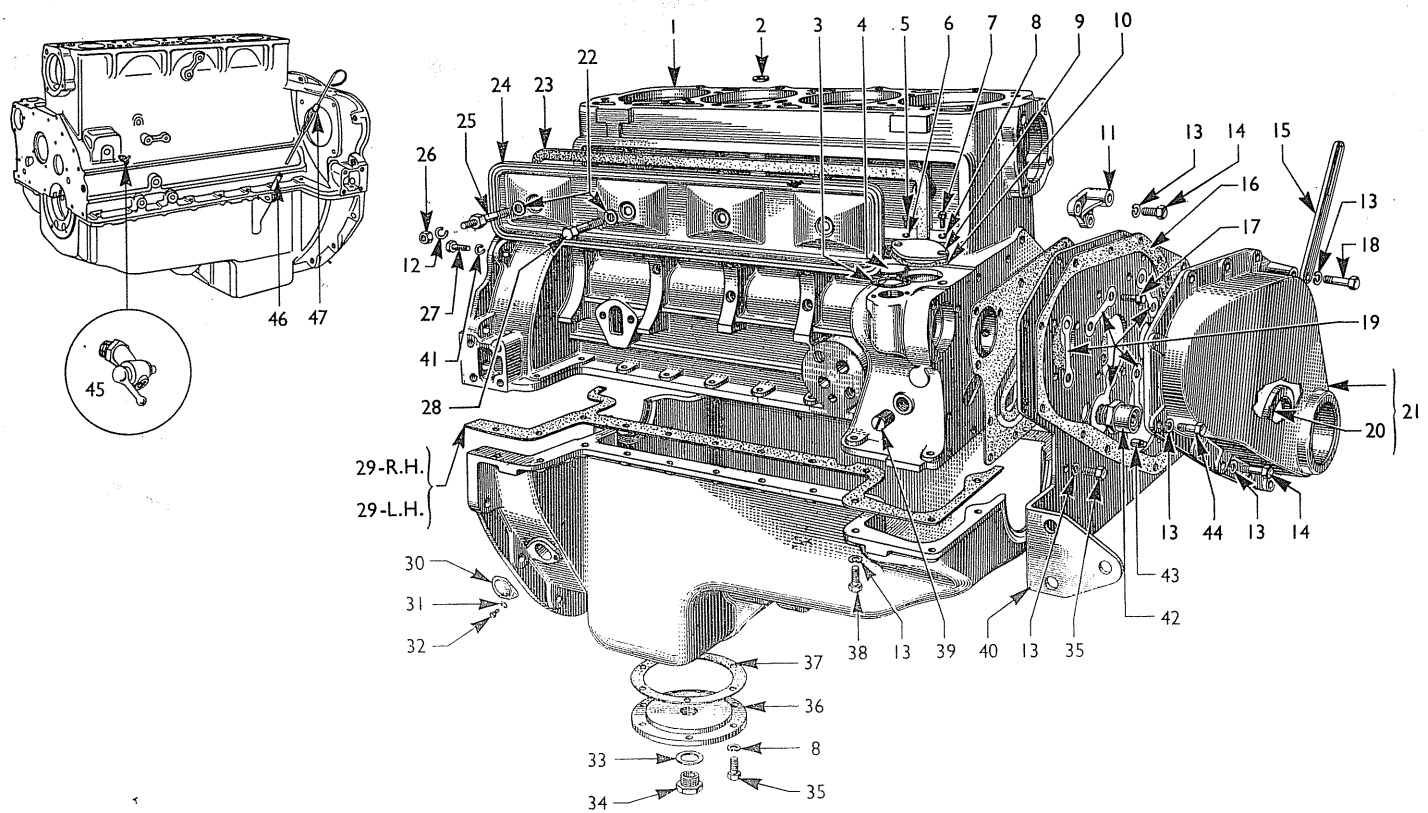
1
2
3
4
5
6
7
8
9
10
11
12
13
14
15
16
17
18
19
20
21
22
23
24
25
26
27
28
29-R.H.
29-L.H.
30
31
32
33
34
35
36
37
38
39
40
42
43
44
45
46
47

Ref.	Part No.	Description	Ref.	Part No.	Description

CYLINDER BLOCK AND SUMP—EXTERIOR

1	500E–6010	...Block assy.
2	E1ADKN–6053	...Seal
3	E1ADKN–66017-B	...Gasket
4	E1ADKN–66016-B	...Cover
5	20308–S	...Screw
6	34805–S	...Lockwasher
7	20326–S	...Screw
8	34826–S	...Lockwasher
9	E1ADDN–12368	...Cover
10	E1ADKN–12143	...Gasket
11	E1ADKN–10153	...Bracket
12	34826–S2	...Lockwasher
13	34846–S	...Lockwasher
14	20406–S	...Screw
15	E1ADKN–10145	...Arm
16	E1ADKN–6020-B	...Gasket
17	20348–S	...Screw
18	45516–S2	...Screw
19	E1ADKN–6819	...Plate
20	E1ADKN–6362-B	...Seal
21	E1ADKN–6019-B	...Cover
22	E2–CH–9	...Washer
23	E1ADKN–6521	...Gasket
24	E1ADKN–6520-B	...Cover
25	E1ADKN–66513	...Bolt
26	33797–S2	...Nut
27	20450–ES	...Bolt
28	20448–S	...Screw
29	E58–Z–9	...Gaskets
30	E3–GC–9	...Cover
31	34806–S	...Lockwasher
32	20310–S	...Screw
33	E86H–6734	...Gasket
34	E1ADKN–6730	...Plug
35	20346–S2	...Screw
36	E1ADKN–6735	...Cover
37	E1ADKN–6728	...Gasket
38	20386–ES	...Screw
39	119760–ES	...Plug
40	E1ADKN–6030-C	...Plate
41	34808–S2	...Lockwasher
42	E1ADKN–6660-C	...Valve
43	E1ADKN–6086	...Dowel
44	20347–S	...Screw
45	E1ADKN–8115-B	...Cock
46	E1ADKN–6723-B	...Tube
47	E1ADKN–6750-B	...Indicator

Dichtungssatz
f. Motor
DKN 6008

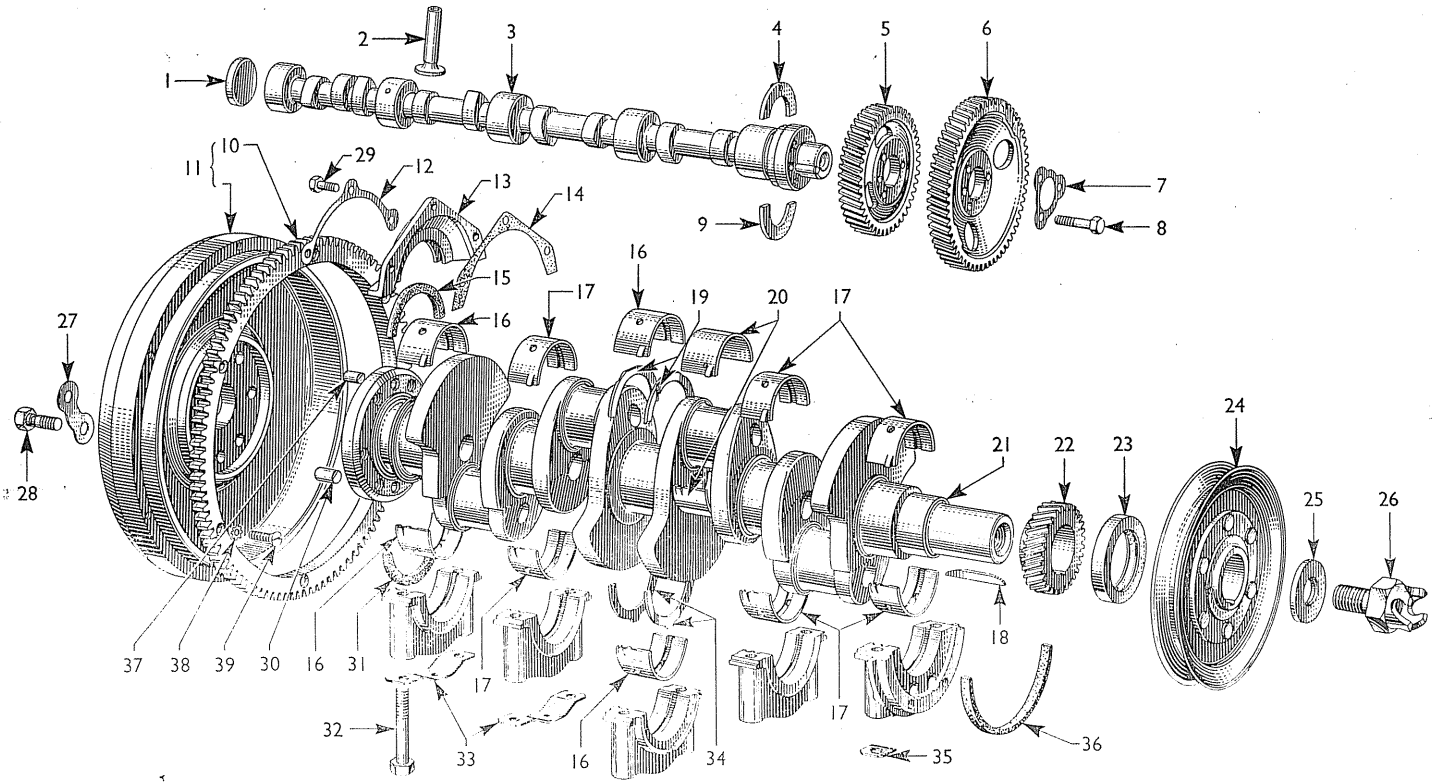
1
2
3
4
5
6
7
8
9
10
11
12
13
14
15
16
17
18
19
20
21
22
23
24
25
26
27
28
29
30
31
32
33
34
35
36
37
38
39

Ref.	Part No.	Description

CYLINDER BLOCK AND SUMP—INTERIOR

Ref.	Part No.	Description
1	119779–ES	...Plug
2	E1ADKN–6489–B/C	...Tappet
3	E1ADKN–6251–E	...Camshaft
4	E1ADKN–6280	...Plate
5	E1ADKN–66614	...Gear
6	E1ADKN–6256–B	...Gear
7	E1ADKN–6258–B	...Retainer
8	118844–ES	...Screw
9	E1ADKN–6267	...Plate
10	E1ADKN–6384	...Gear (Petrol and Vap. Oil)
	E1ADDN–6384	...Gear (Diesel)
11	E1ADKN–6375–D	...Flywheel (Petrol and Vap. Oil)
	E1ADDN–6375–D	...Flywheel (Diesel)
12	E1ADKN–6343–B	...Plate
13	E1ADKN–6335–C	...Retainer
14	E1ADKN–6369–B	...Gasket
15	E1ADKN–6702–A	...Seal
16	E1ADKN–6338–B	...Liner std.
	E1ADKN–6338–C	...Liner ·010″ u/s. bore
	E1ADKN–6338–D	...Liner ·020″ u/s. bore
	E1ADKN–6338–E	...Liner ·030″ u/s. bore
	E1ADKN–6338–F	...Liner ·040″ u/s. bore
	E1ADKN–6338–G	...Liner std. bore ·015″ o/s. O.D.
17	E1ADKN–6333–B	...Liner std.
	E1ADKN–6333–C	...Liner ·010″ u/s. bore
	E1ADKN–6333–D	...Liner ·020″ u/s. bore
	E1ADKN–6333–E	...Liner ·030″ u/s. bore
	E1ADKN–6333–F	...Liner ·040″ u/s. bore
	E1ADKN–6333–G	...Liner std. bore ·015″ o/s. O.D.
18	119846–ES	...Key
19	E1ADKN–6334–A	...Washer std.
	E1ADKN–6334–B	...Washer ·0025″ o/s.
	E1ADKN–6334–C	...Washer ·005″ o/s.
	E1ADKN–6334–D	...Washer ·0075″ o/s.
	E1ADKN–6334–E	...Washer ·010″ o/s.
20	E1ADKN–6211–B	...Liner std.
	E1ADKN–6211–C	...Liner ·010″ u/s. bore
	E1ADKN–6211–D	...Liner ·020″ u/s. bore
	E1ADKN–6211–E	...Liner ·030″ u/s. bore
	E1ADKN–6211–F	...Liner .040″ u/s. bore
21	E1ADDN–6303–D	...Crankshaft (Diesel)
	E1ADKN–6303–C	...Crankshaft (Petrol and Vap. Oil)
22	E1ADKN–6306–B	...Gear
23	E1ADKN–6362–B	...Seal
24	E1ADKN–6312–C	...Pulley
25	E1ADKN–6332	...Washer
26	E1ADKN–6319	...Ratchet
27	E1ADKN–6367	...Plate
28	20423–ES	...Bolt
29	355599–S	...Screw
30	E1ADKN–6387–A	...Dowel
31	E1ADKN–6701–A	...Seal
32	E1ADKN–6346–B	...Bolt
33	E16–CA–9	...Plate
34	E1ADKN–6336–A	...Washer std.
	E1ADKN–6336–B	...Washer ·0025″ o/s.
	E1ADKN–6336–C	...Washer ·005″ o/s.
	E1ADKN–6336–D	...Washer ·0075″ o/s.
	E1ADKN–6336–E	...Washer ·010″ o/s.
35	E17–CA–9	...Plate
36	E1ADKN–6700	...Packing
37	E1ADKN–6387–B	...Dowel
38	34956–S	...Lockwasher
39	50055–S	...Screw

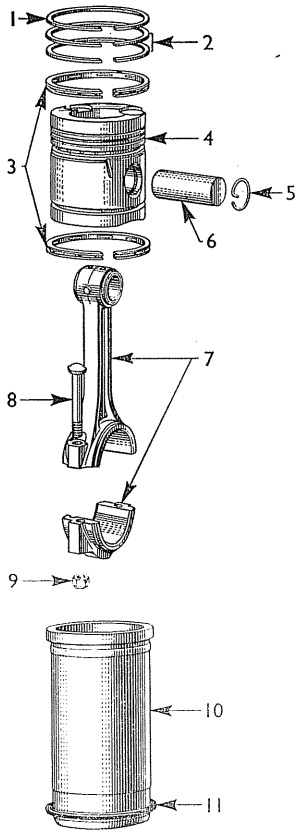

DIESEL

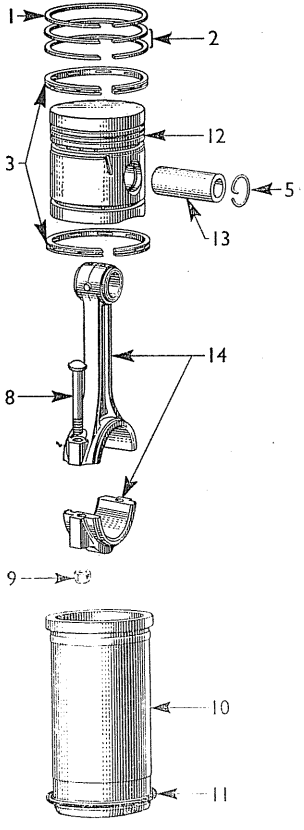

VAP. OIL

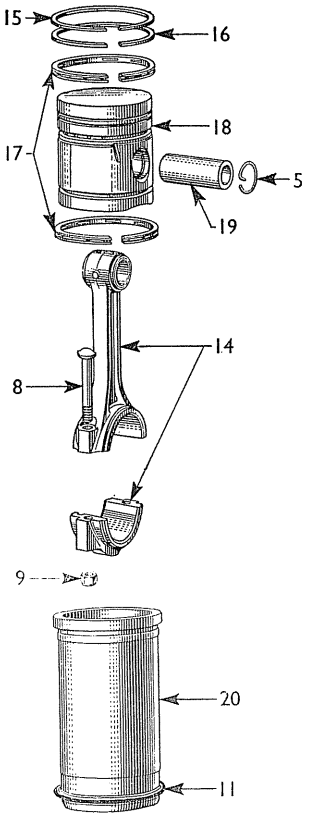

PETROL

Ref.	Part No.	Description	Ref.	Part No.	Description

PISTONS, CONNECTING RODS AND LINERS

1	E1ADKN–6150-C	...Ring
2	E1ADKN–6152-C	...Ring
3	E1ADKN–6153-A	...Ring
4	E1ADDN–6110-C	...Piston
5	E1ADKN–6140-A	...Retainer
6	E1ADDN–6135-B	...Pin
7	E1ADDN–6200-B	...Rod
8	E1ADKN–6215-B	...Bolt
9	34447–ES2B	...Nut
10	E1ADKN–6055	...Liner
11	E1ADKN–6061-A	...Seal
12	E1ADKN–6110-C	...Piston
13	E1ADKN–6135	...Pin
14	E1ADKN–6200-B	...Rod
15	E1ADN–6150-C	...Ring
16	E1ADN–6152-C	...Ring
17	E1ADN–6153-A	...Ring
18	E1ADN–6110–C	...Piston
19	E1ADN–6135	...Pin
20	E1ADN–6055	...Liner

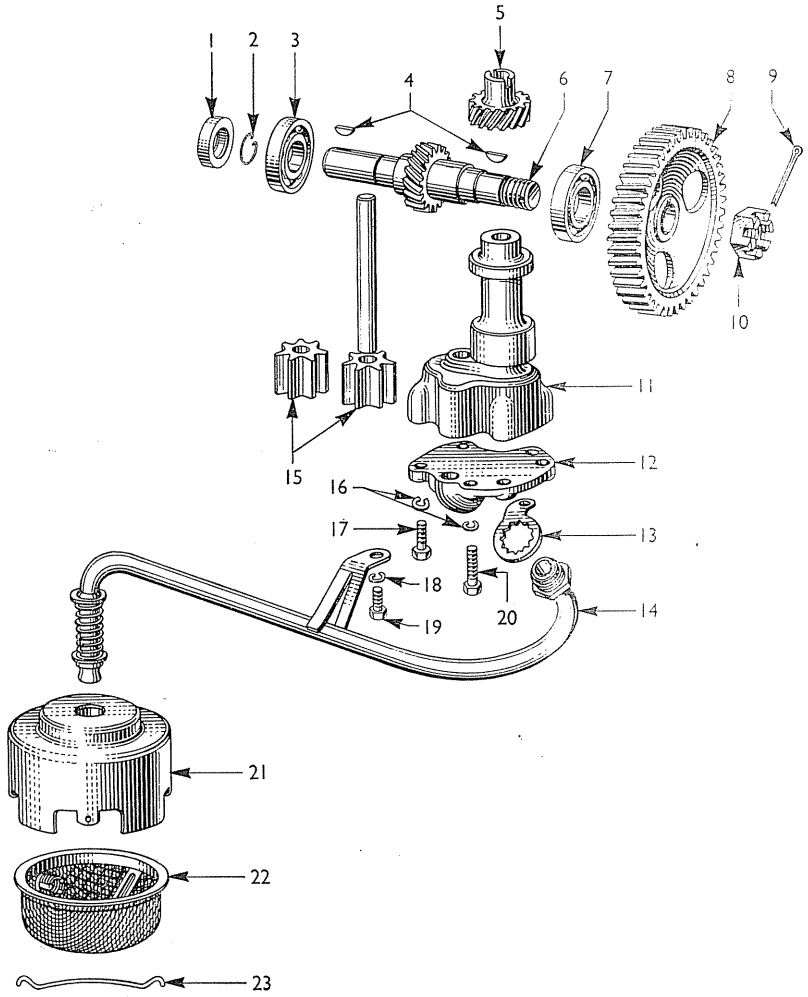
1
2
3
4
5
6
7
8
9
10
11
12
13
14
15
16
17
18
19
20
21
22
23

Ref.	Part No.	Description	Ref.	Part No.	Description

OIL PUMP AND AUXILIARY DRIVE SHAFT

1	E1ADDN–66610-A	...Seal
2	E1ADDN–66611	...Ring
3	E1ADKN–66620-A	...Bearing
4	74175–S	...Key
5	E1ADKN–6652	...Gear
6	E1ADKN–66607	...Shaft
7	E1ADKN–66618-A	...Bearing
8	E1ADKN–66615	...Gear
9	72054–S	...Split pin
10	45302–S	...Nut
11	E1ADKN–6602	...Body
12	E1ADKN–6616	...Cover
13	E1ADKN–6642-C	...Plate
14	E1ADKN–6613-B	...Pipe
15	E1ADKN-6610	...Gear
16	34806–S2	...Lockwasher
17	20366–S	...Screw
18	34826–S	...Lockwasher
19	20310–S	...Screw
20	20346–S	...Screw
21	E1ADKN–6611	...Cover
22	E41A–6623-A	...Screen
23	68–6628	...Spring

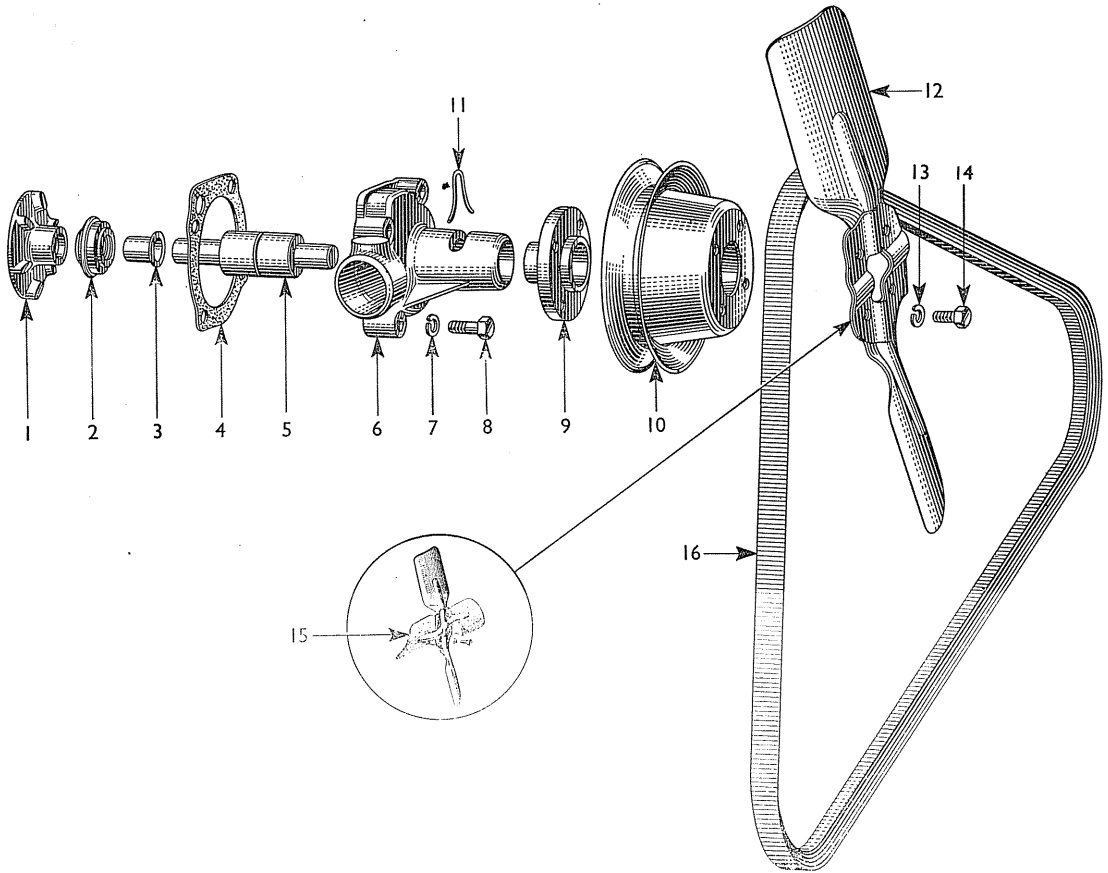
11
12
13
14
1
2
3
4
5
6
7
8
9
10
16
15

Ref.	Part No.	Description	Ref.	Part No.	Description

WATER PUMP, FAN AND FAN BELT

1	E1ADKN–8512	...Impeller
2	E1ADKN–8564	...Seal
3	7HA–8550	...Slinger
4	E1ADKN–8507	...Gasket
5	E1ADKN–8530	...Shaft
6	E1ADKN–8505	...Housing
7	34826–S	...Lockwasher
8	20426–S	...Screw
9	E1ADKN–8567-B	...Hub
10	E1ADKN–8509-C	...Pulley
11	E1ADKN–8576	...Retainer
12	E1ADDN–8600-A	...Fan 18″ dia.
	E1ADDN–8600-B	...Fan 15″ dia.
13	34806–S2	...Lockwasher
14	20347–S2	...Screw
15	E1ADKN–8600	...Fan 18″ dia.
16	E1ADKN–8620-C	...Belt 13.8 X 1105

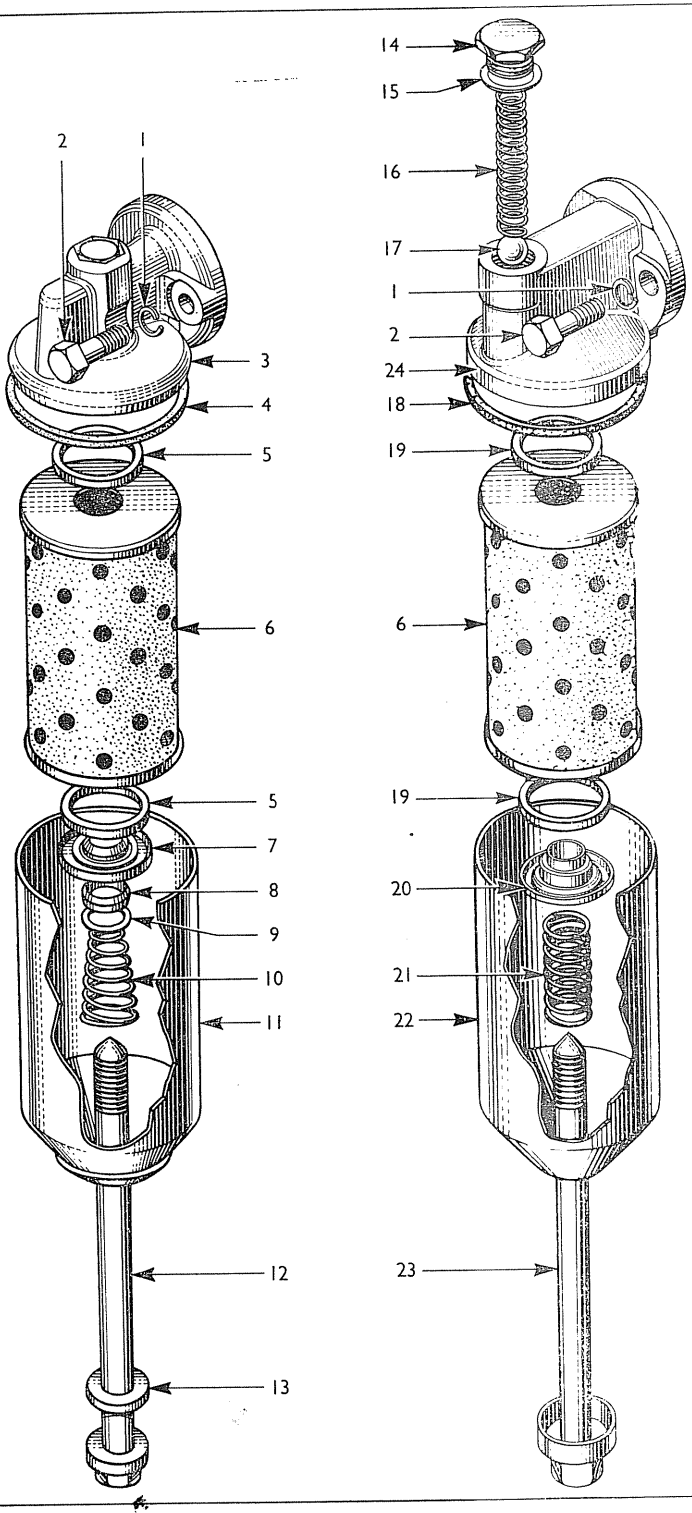
2
1
3
4
5
6
5
7
8
9
10
11
12
13
14
15
16
17
1
2
24
18
19
6
19
20
21
22
23

Ref.	Part No.	Description	Ref.	Part No.	Description

ENGINE OIL FILTERS

1	34828–S	...Lockwasher
2	20430–ES	...Screw
3	E37–CF-9	...Head assy.
4	E1ADKN–18688-C	...Gasket
5	E1ADKN–18689-C	...Gasket
6	E1ADKN–18662-B	...Element
7	E1ADKN–18631-C	...Retainer
8	E36–CF-9	...Seal
9	E35–CF-9	...Washer
10	E40–CF-9	...Spring
11	E1ADKN–6882	...Shell
12	E1ADKN–18691-C	...Bolt
13	E1ADKN–18675-B	...Gasket
14	119758–ES	...Plug
15	118346–ES	...Washer
16	E1ADKN–18646-E	...Spring
17	E1ADKN–18649-B	...Valve
18	E1ADKN–18688-B	...Gasket
19	E1ADKN–18689-B	...Gasket
20	E1ADKN–18631-B	...Retainer
21	E38–CF-9	...Spring
22	E1ADKN–6883-B	...Shell
23	E1ADKN–6741-B	...Bolt
24	E39–CF-9	...Head assy.

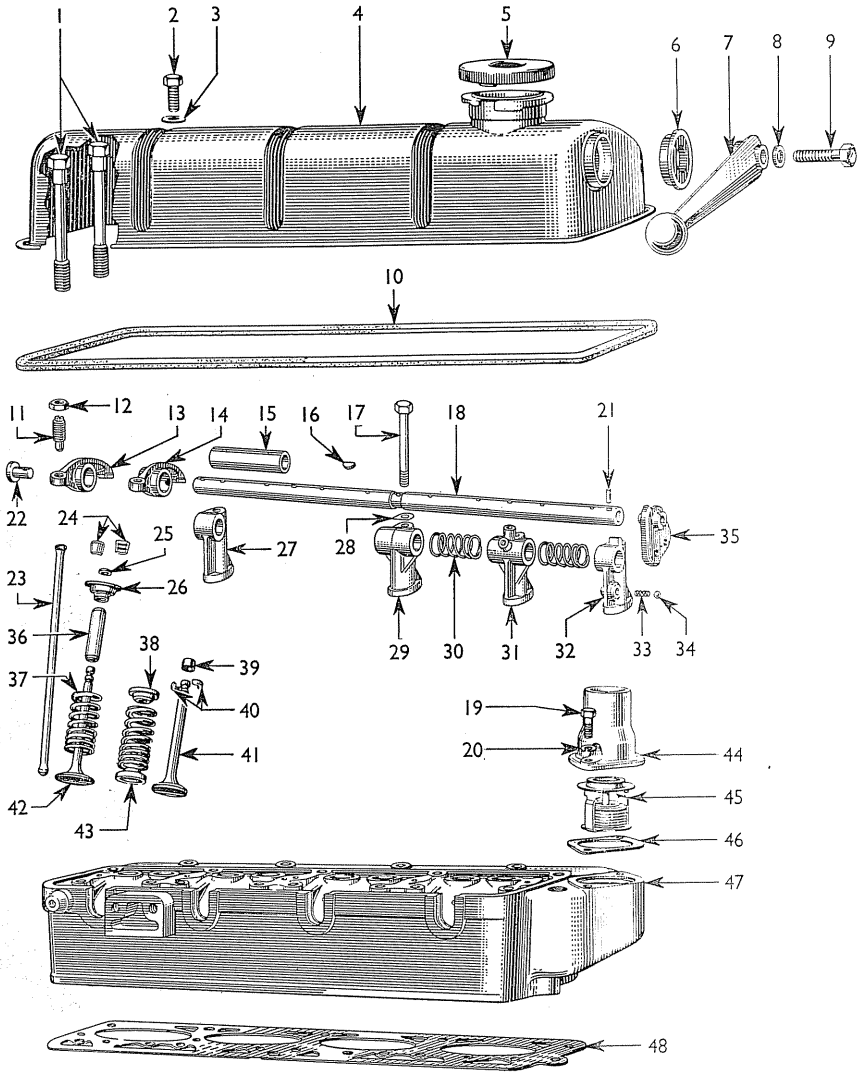
1
2
3
4
5
6
7
8
9
10
11
12
13
14
15
16
17
18
21
22
24
25
27
28
35
23
26
36
38
39
37
40
41
29
30
31
32
33
34
19
20
44
45
46
42
43
47
48

Ref.	Part No.	Description	Ref.	Part No.	Description

CYLINDER HEAD AND ROCKER MECHANISM—DIESEL

Ref.	Part No.	Description
1	E1ADDN–6067	...Bolt
2	20326–S	...Screw
3	E3–CH–9	...Washer
4	E1ADDN–6582	...Cover
5	E1ADKN–6766	...Cap
6	E10–CP–9	...Seal
7	E7–CP–9	...Lever
8	E3–CH–9	...Washer
9	20147–S	...Screw
10	E1ADKN–6584	...Gasket
11	E0TA–6486	...Screw
12	33911–ES	...Locknut
13	E1ADDN–6469–A	...Rocker L.H.
14	E1ADDN–6468–A	...Rocker R.H.
15	E1ADDN–6458	...Sleeve
16	74172–ES	...Key
17	45548–S	...Screw
18	E1ADDN–6459–B	...Shaft
19	20386–S2	...Screw
20	34806–S2	...Lockwasher
21	E1ADKN–6474	...Pin
22	E1ADKN–6498	...Plug
23	E1ADN–6488	...Rod
24	E1ADKN–6518	...Collet
25	E1ADKN–6571	...Seal
26	E1ADDN–6514–B	...Retainer
27	E1ADKN–6531	...Bracket
28	E1ADKN–6473	...Washer
29	E1ADKN–6462	...Bracket
30	E1ADDN–6466	...Spring
31	E1ADDN–6461	...Bracket
32	E1ADDN–6531	...Bracket
33	E4–CP–9	...Spring
34	353081–S	...Ball
35	E22–CP–9	...Lever
36	E1ADDN–6510–A	...Bush—inlet
	E1ADDN–6510–C	...Bush—exhaust
37	E1ADKN–6513–B	...Spring
38	E1ADDN–6514	...Retainer
39	E1ADDN–6550	...Cap
40	E1ADDN–6518	...Collet
41	E1ADDN–6505–B	...Valve
42	E1ADDN–6507	...Valve
43	E1–CP–9	...Spacer
44	E0TA–8250	...Connection
45	E1ADKN–8575–B	...Thermostat
46	E1ADKN–8587	...Gasket
47	E1ADDN–6052–E	...Head
48	E1ADKN–6051–B	...Gasket

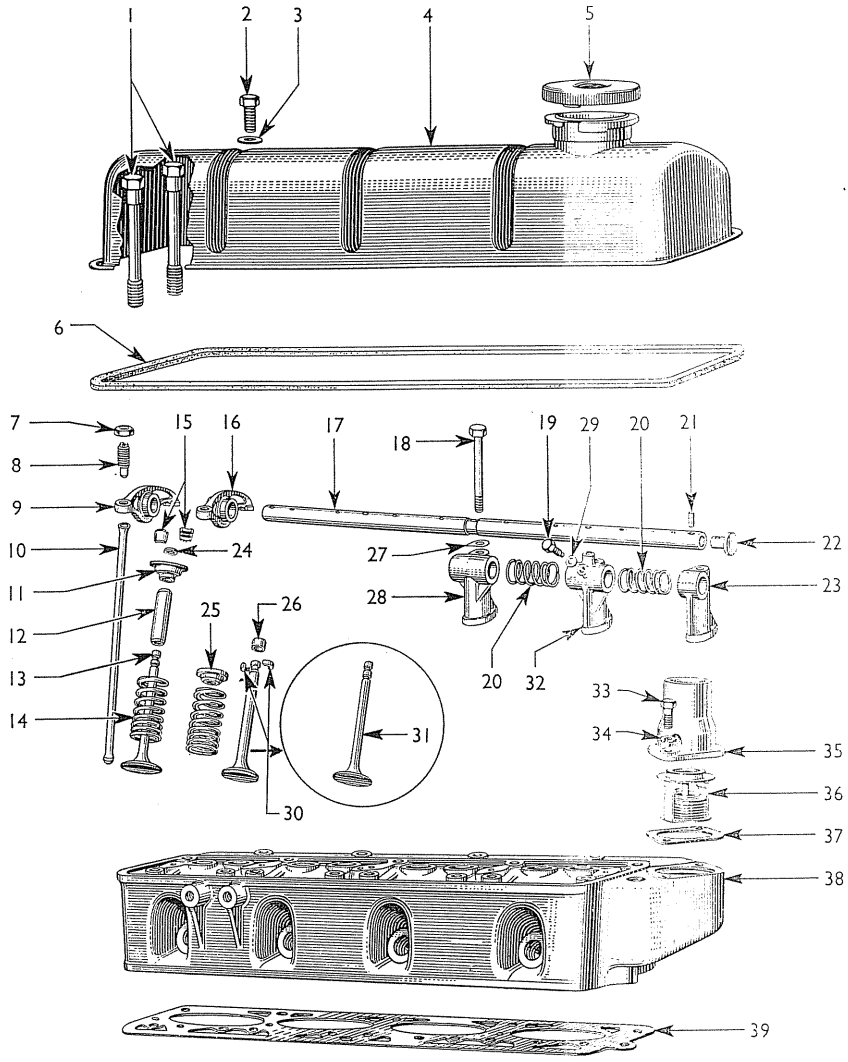
1
2
3
4
5
6
7
8
9
10
11
12
13
14
15
16
17
18
19
29
20
21
22
23
24
27
28
20
32
25
26
30
31
33
34
35
36
37
38
39

Ref.	Part No.	Description	Ref.	Part No.	Description

CYLINDER HEAD AND ROCKER MECHANISM—PETROL AND VAP. OIL

Ref.	Part No.	Description
1	E1ADKN–6067	...Bolt (Vap. Oil)
	E1ADDN–6067	...Bolt (Petrol)
2	20326–S	...Screw
3	E3–CH-9	...Washer
4	E1ADKN–6449	...Cover
5	E1ADKN–6766	...Cap
6	E1ADKN–6584	...Gasket
7	33911–ES	...Nut
8	E0TA–6486	...Screw
9	E1ADKN–6469	...Rocker L.H.
10	E1ADKN–6488-B	...Rod (Vap. Oil)
	E1ADN–6488	...Rod (Petrol)
11	E1ADKN–6514-B	...Retainer
12	E1ADKN–6510-A	...Bush
13	E1ADKN–6507	...Valve
14	E1ADKN–6513-B	...Spring
15	E1ADKN–6518	...Collet
16	E1ADKN–6468	...Rocker R.H.
17	E1ADKN–6459	...Shaft
18	45548–S	...Screw
19	20325–S	...Screw
20	E1ADKN–6466	...Spring
21	E1ADKN–6474	...Pin
22	E1ADKN–6498	...Plug
23	E1ADKN–6531	...Bracket
24	E1ADKN–6571	...Seal
25	E1ADDN–6514	...Retainer (Petrol)
	E1ADKN–6514-B	...Retainer (Vap. Oil)
26	E1ADDN–6550	...Cap (Petrol)
27	E1ADKN–6473	...Washer
28	E1ADKN–6462	...Bracket
29	34805–S	...Lockwasher
30	E1ADDN–6518	...Collet (Petrol)
	E1ADKN–6518	...Collet (Vap. Oil)
31	E1ADKN–6505	...Valve (Vap.Oil)
	E1ADN–6505	...Valve (Petrol)
32	E1ADKN–6461	...Bracket
33	20386–S2	...Screw
34	34806–S2	...Lockwasher
35	E0TA–8250	...Connection
36	E1ADKN–8575-B	...Thermostat
37	E1ADKN–8587	...Gasket
38	E1ADKN–6052-B	...Head (Vap. Oil)
	E1ADN–6052-B	...Head (Petrol)
39	E1ADKN–6051-B	...Gasket

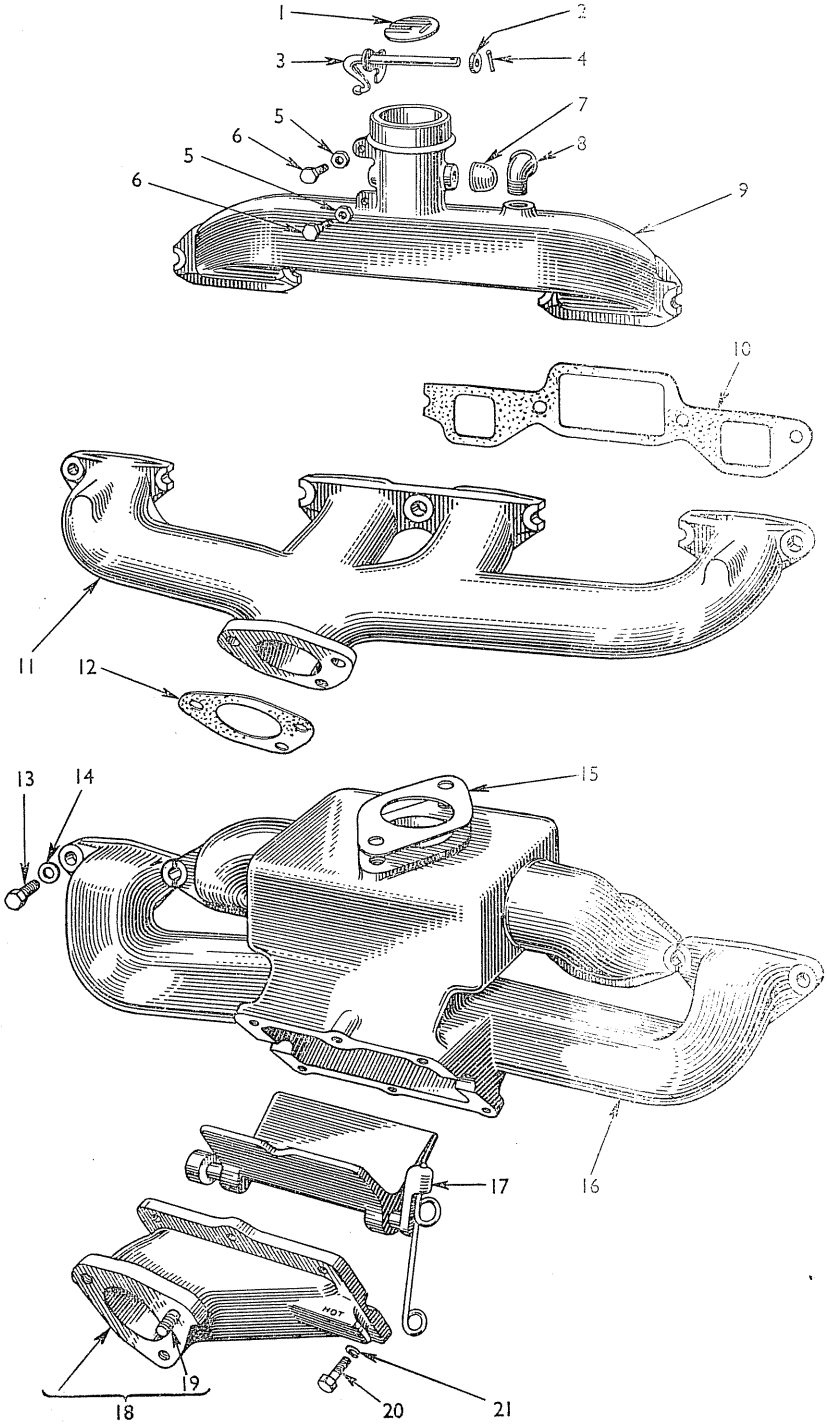
1
2
3
4
5
6
5
6
7
8
9
10
11
12
13
14
15
16
17
18
19
20
21
HOT

Ref.	Part No.	Description	Ref.	Part No.	Description

INLET AND EXHAUST MANIFOLDS

1	E1ADDN–9585-B	...Plate
2	44722–ES7/8	...Washer
3	E1ADDN–9581-B	...Spindle
4	72016–S	...Split pin
5	33796–S	...Nut
6	118936–ES7/8	...Screw
7	E1ADDN–99571	...Cap
8	E1ADKN–17563	...Adaptor
9	E1ADDN–9425-C	...Manifold (Diesel)
	E1ADN–9424	...Manifold (Petrol)
10	E1ADDN–9448	...Gasket (Diesel)
	E1ADN–9448	...Gasket (Petrol)
11	E1ADDN–9429	...Manifold (Diesel)
	E1ADN–9429	...Manifold (Petrol)
12	E1ADKN–9450-B	...Gasket
13	20428–S	...Screw
14	118193–ES	...Washer
15	E1ADKN–9447	...Gasket (Petrol and Vap. Oil)
16	E1ADKN–9425-C	...Manifold
17	E1ADKN–9483	...Shutter assy.
18	E1ADKN–9494-B	...Adaptor
19	88397–S	...Stud
20	20408–S	...Screw
21	34807–S	...Lockwasher

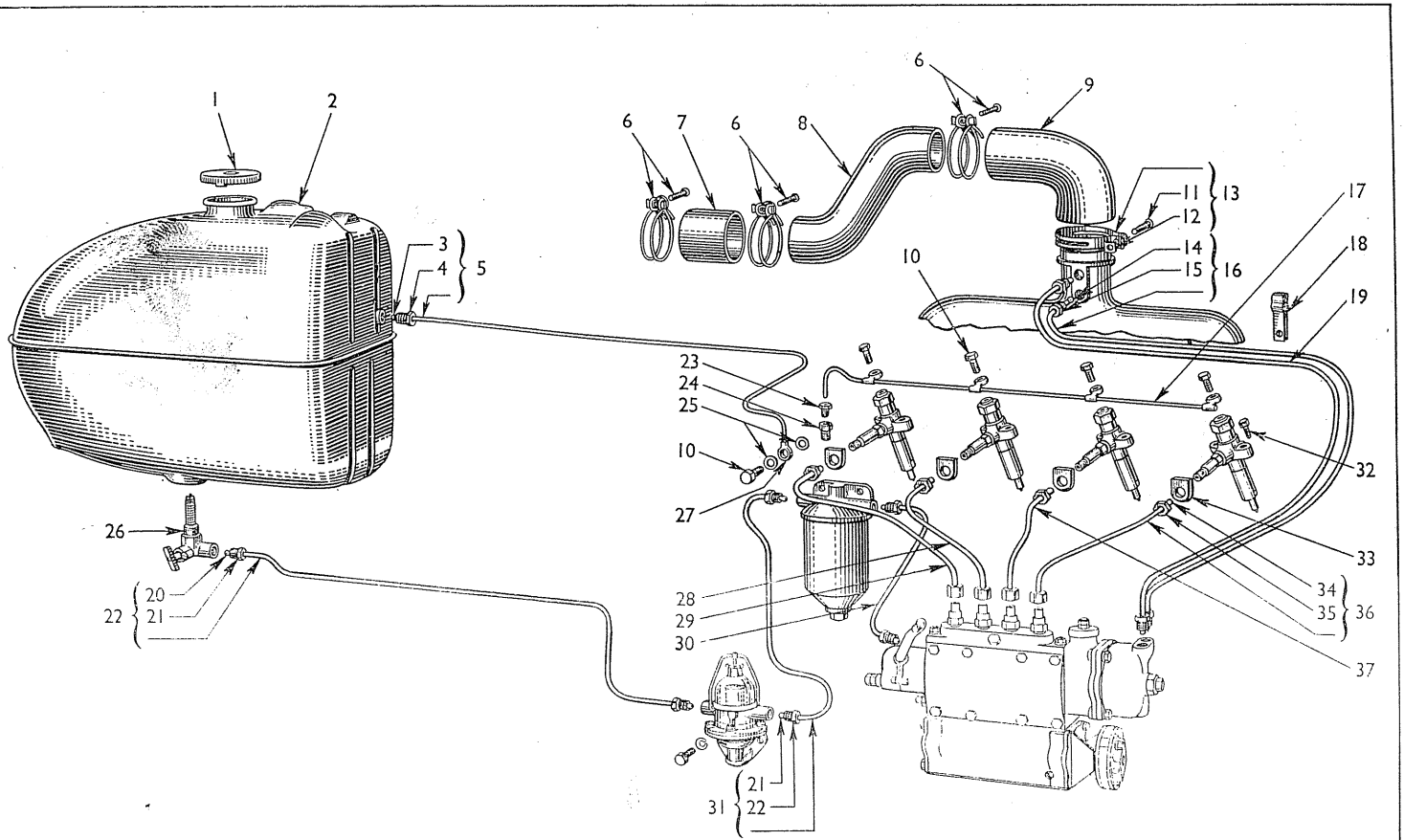
1
2
3
4
5
6
7
6
8
6
9
10
11
12
13
14
15
16
17
18
19
10
23
24
25
10
27
26
22
20
21
28
29
30
31
21
22
32
33
34
35
36
37

Ref.	Part No.	Description

FUEL SYSTEM—DIESEL

Ref.	Part No.	Description
1	E1ADKN-9030-B	...Cap
2	E1ADDN-9002	...Tank
3	E98T-9242	...Ferrule
4	E9-JA-9	...Nut
5	E8-JA-9	...Pipe
6	E62A-9628-A	...Clamp
7	E27N-18232	...Hose
8	E1ADKN-18229-B	...Pipe
9	E1ADDN-18233	...Hose
10	21470-ES	...Screw
11	27161-S	...Screw
12	34141-S	...Nut
13	E1ADDN-9628-B	...Clamp
14	119984-ES	...Ferrule
15	117606-ES	...Nut
16	E1ADDN-993141-B	...Pipe
17	E1ADDN-993180-B	...Pipe
18	E1ADDN-993143	...Clip
19	E1ADDN-993139-B	...Pipe
20	EB-9242	...Ferrule
21	EB-9243-A	...Nut
22	E1ADKN-99189-A	...Pipe
23	B-17542-A	...Nut
24	A-17540-A	...Connector
25	E9-CF-9	...Washer
26	E1ADKN-9189-A	...Tap
27	E1ADDN-993131	...Connection
28	E1ADDN-993176-B	...Pipe
29	E1ADDN-993177-B	...Pipe
30	E1ADDN-9337-B	...Pipe
31	E1ADDN-9230-B	...Pipe
32	118830-ES	...Bolt
33	E1ADDN-993156-B	...Seal
34	E1ADDN-9242-B	...Ferrule
35	E1ADDN-993178-B	...Nut
36	E1ADDN-993174-B	...Pipe
37	E1ADDN-993175-B	...Pipe

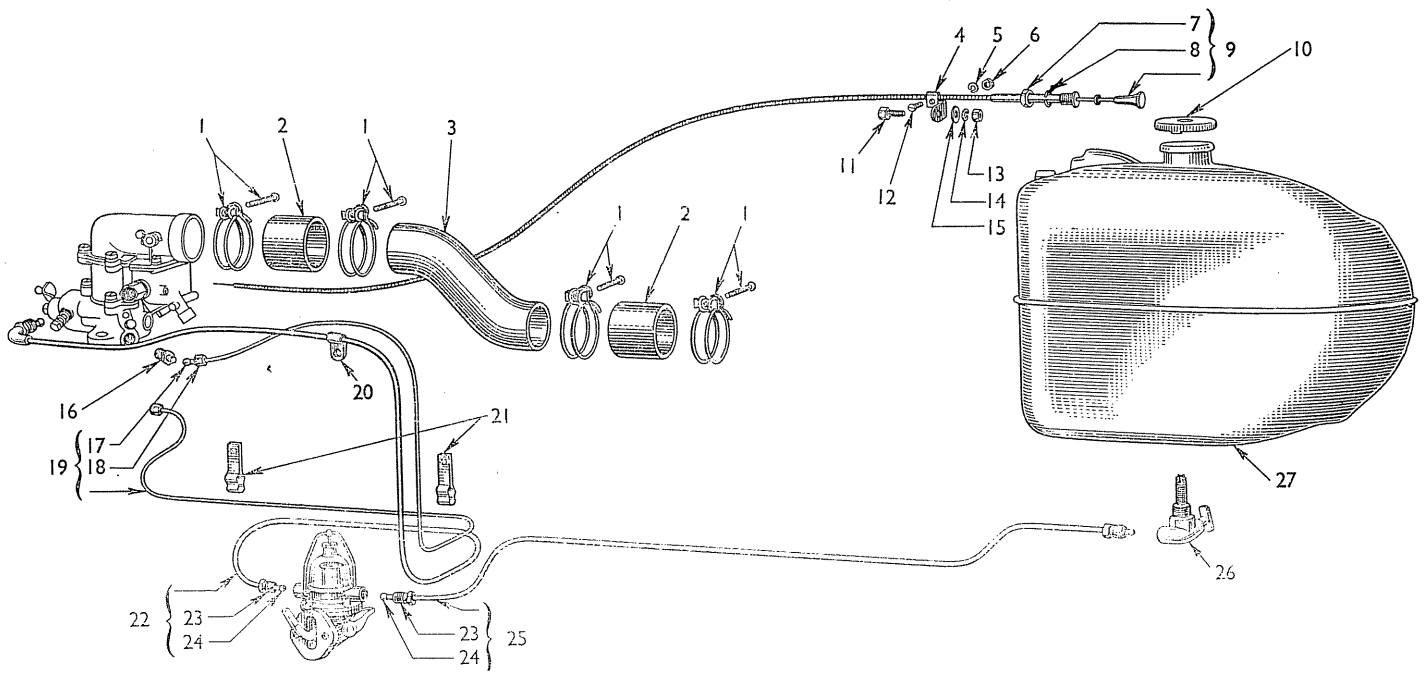
1
2
1
3
4
5
6
7
8
9
10
11
12
13
14
15
1
2
1
16
17
18
19
20
21
22
23
24
23
24
25
26
27

Ref.	Part No.	Description	Ref.	Part No.	Description

FUEL SYSTEM—PETROL AND VAP. OIL

1	11A–8287	...Clamp
2	E27N–18232	...Hose
3	E1ADN–18229-B	...Pipe (Petrol)
	E1ADKN–18229-B	...Pipe (Vap. Oil)
4	E1ADN–9792	...Clip
5	34805–S	...Lockwasher
6	34079–S2	...Nut
7	351052–S	...Nut
8	351452–S	...Lockwasher
9	E1ADKN–9700	...Control
10	E1ADKN–9030-B	...Cap
11	20366–S	...Bolt
12	31612–S	...Screw
13	33797–S	...Nut
14	34806–S	...Lockwasher
15	44722–S2	...Washer
16	E0TA–12224	...Adaptor
17	119980–ES	...Ferrule
18	117560–ES	...Nut
19	E1ADN–12226	...Pipe
20	E1ADN–66753	...Clip
21	E1ADKN–9295-C	...Clip
22	E1ADN–9369	...Pipe
23	EB–9243-A	...Nut
24	EB–9242	...Ferrule
25	E1ADKN–99189-A	...Pipe (Petrol)
	E1ADKN–99189-B	...Pipe (Vap. Oil)
26	E1ADKN–9189-A	...Tap (Petrol)
	E1ADKN–9189-B	...Tap (Vap. Oil)
27	E1ADN–9002	...Tank (Petrol)
	E1ADKN–9002	...Tank (Vap. Oil)

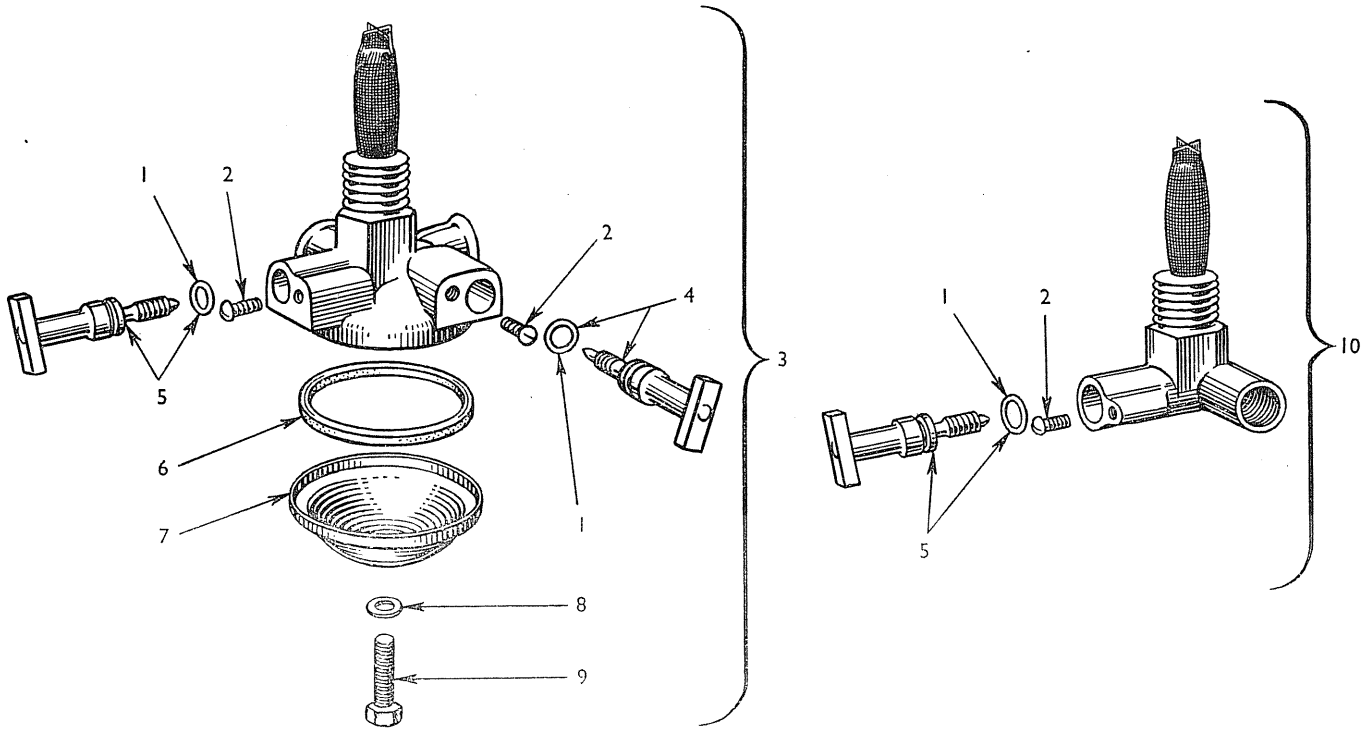
1
2
2
4
5
6
7
1
8
9
3
1
2
5
10

Ref.	Part No.	Description	Ref.	Part No.	Description

FUEL CONTROL TAPS

1	E27N–9176	...Ring
2	27068–S7	...Screw
3	E1ADKN–9189-B	...Tap assy.
4	E27N–9163-C	...Valve
5	E1ADKN–9200	...Valve
6	68–9364	...Gasket
7	78E–9355-B	...Cover
8	BE–9357	...Washer
9	20385–S8	...Bolt
10	E1ADKN–9189-A	...Tap assy.

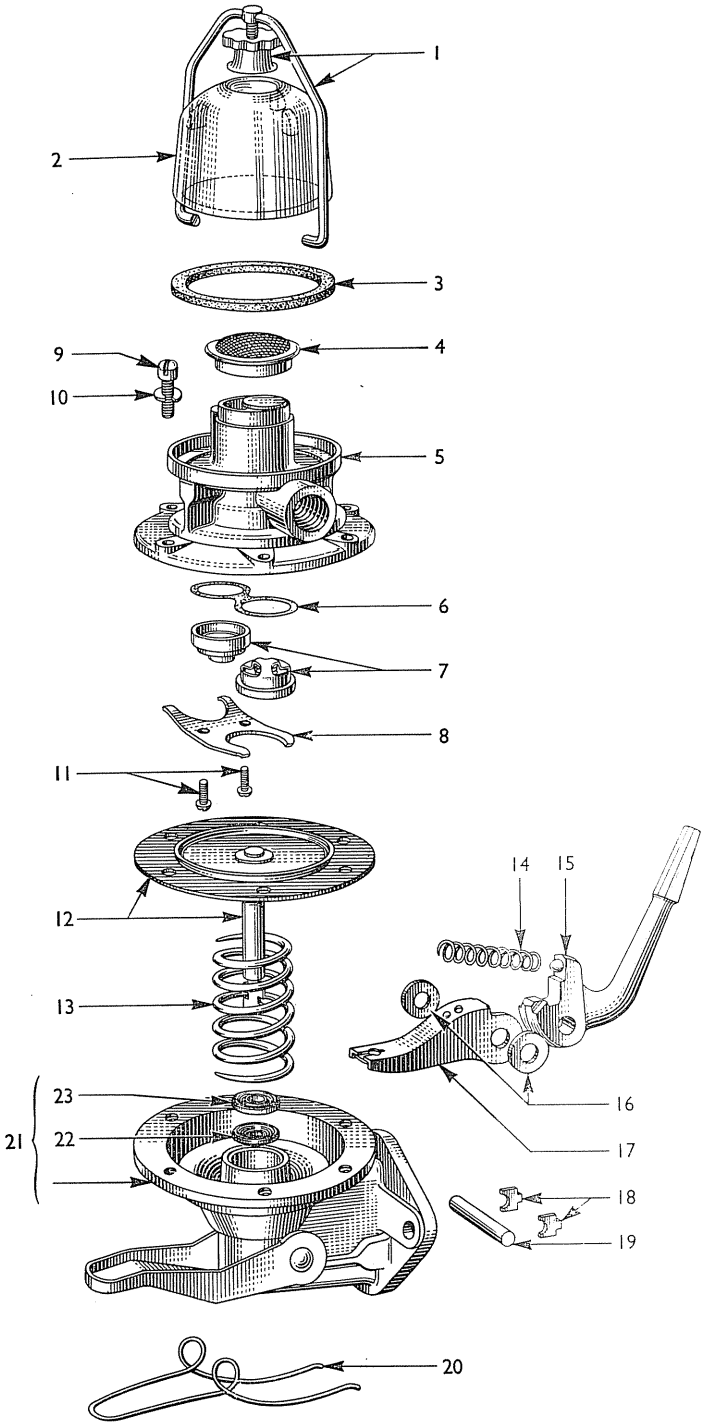
1
2
3
4
9
10
5
6
7
8
11
12
13
14
15
16
17
18
19
20
21
22
23

Ref.	Part No.	Description	Ref.	Part No.	Description

FUEL PUMP

1	E1ADKN–9387-B	...Clamp assy.
2	E1ADKN–9355	...Bowl
3	E1ADKN–9364	...Gasket
4	E1ADKN–9365	...Screen
5	E1ADKN–9354	...Body
6	11A–9367	...Gasket
7	11A–9352	...Valve
8	11A–9361-A	...Plate
9	31628–S7/8	...Screw
10	34803–S7/8	...Lockwasher
11	26466–S7/8	...Screw
12	E93A–9398	...Diaphragm
13	78E–9396	...Spring
14	B–9380	...Spring
15	E1ADKN–9376	...Arm
16	78E–9389	...Washer
17	E93A–9381-B	...Link
18	E1ADKN–9379	...Retainer
19	E1ADKN–9378	...Pin
20	E62A–9345	...Spring
21	E1ADKN–9413	...Body
22	E0TA–99399-B	...Seal
23	E0TA–99401	...Retainer

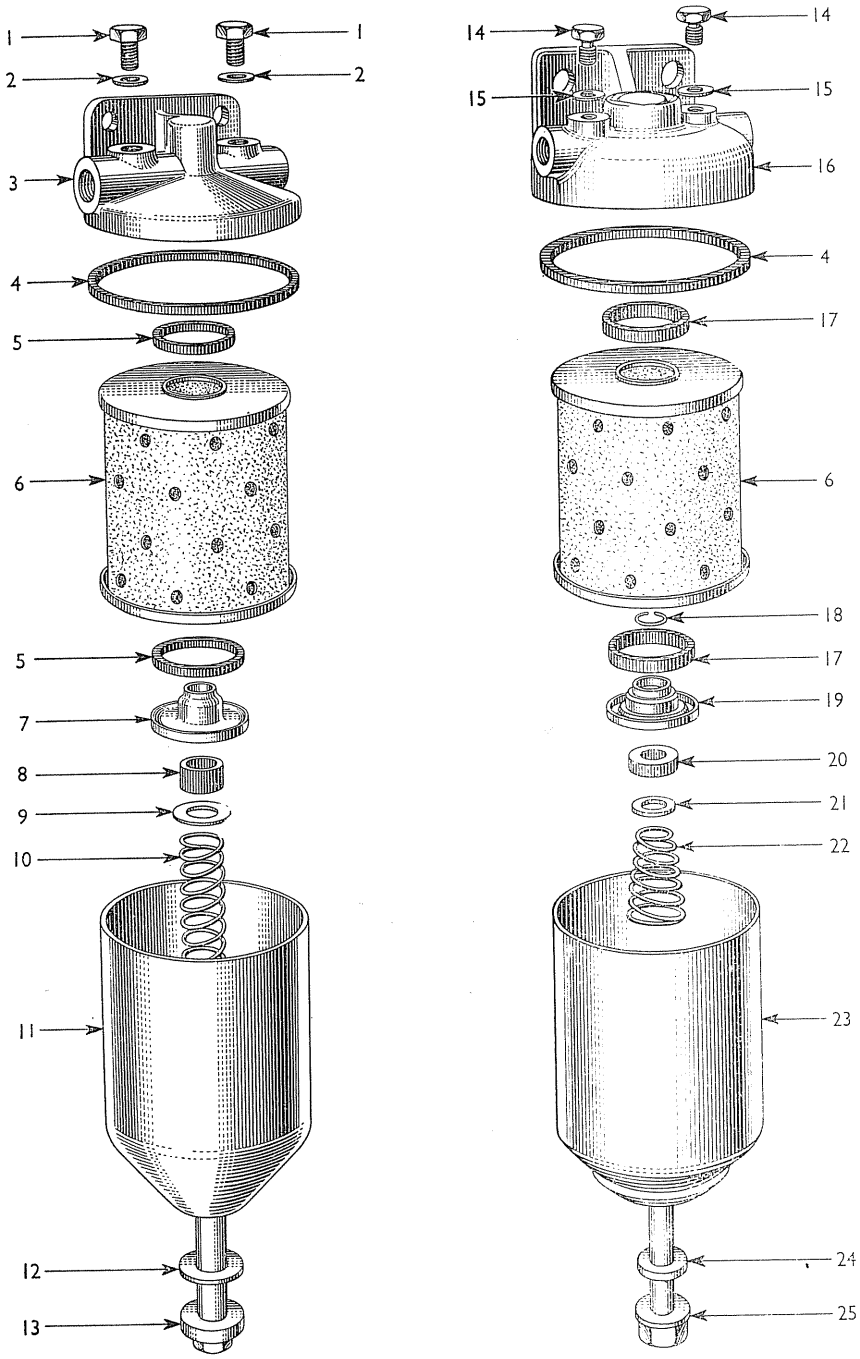
1
1
2
2
3
4
5
6
5
7
8
9
10
11
12
13
14
14
15
15
16
4
17
6
18
17
19
20
21
22
23
24
25

Ref.	Part No.	Description	Ref.	Part No.	Description

FUEL OIL FILTERS

1	E1ADDN-99158-C	...Screw
2	E1ADDN-99159-C	...Gasket
3	E1ADDN-99157-B	...Head
4	E1ADKN-18688-B	...Gasket
5	E1ADKN-18689	...Gasket
6	E1ADDN-99162-B	...Element
7	E1ADDN-99165-B	...Retainer
8	E1ADDN-99166-B	.. Seal
9	E1ADDN-99167	...Washer
10	E1ADDN-99169-B	...Spring
11	E107-CL-9	...Shell
12	100E-6749-A	...Gasket
13	E104-CL-9	...Bolt
14	E1ADDN-99158-D	...Screw
15	E1ADDN-99159-D	...Gasket
16	E286-CL-9	...Head
17	E1ADKN-18688-C	...Gasket
18	E1ADKN-18650-B	...Circlip
19	E1ADKN-18631-B	...Retainer
20	E36-CF-9	...Seal
21	E35-CF-9	...Washer
22	E40-CF-9	...Spring
23	E287-CL-9	...Shell
24	E1ADKN-18675-B	...Gasket
25	E288-CL-9	...Bolt

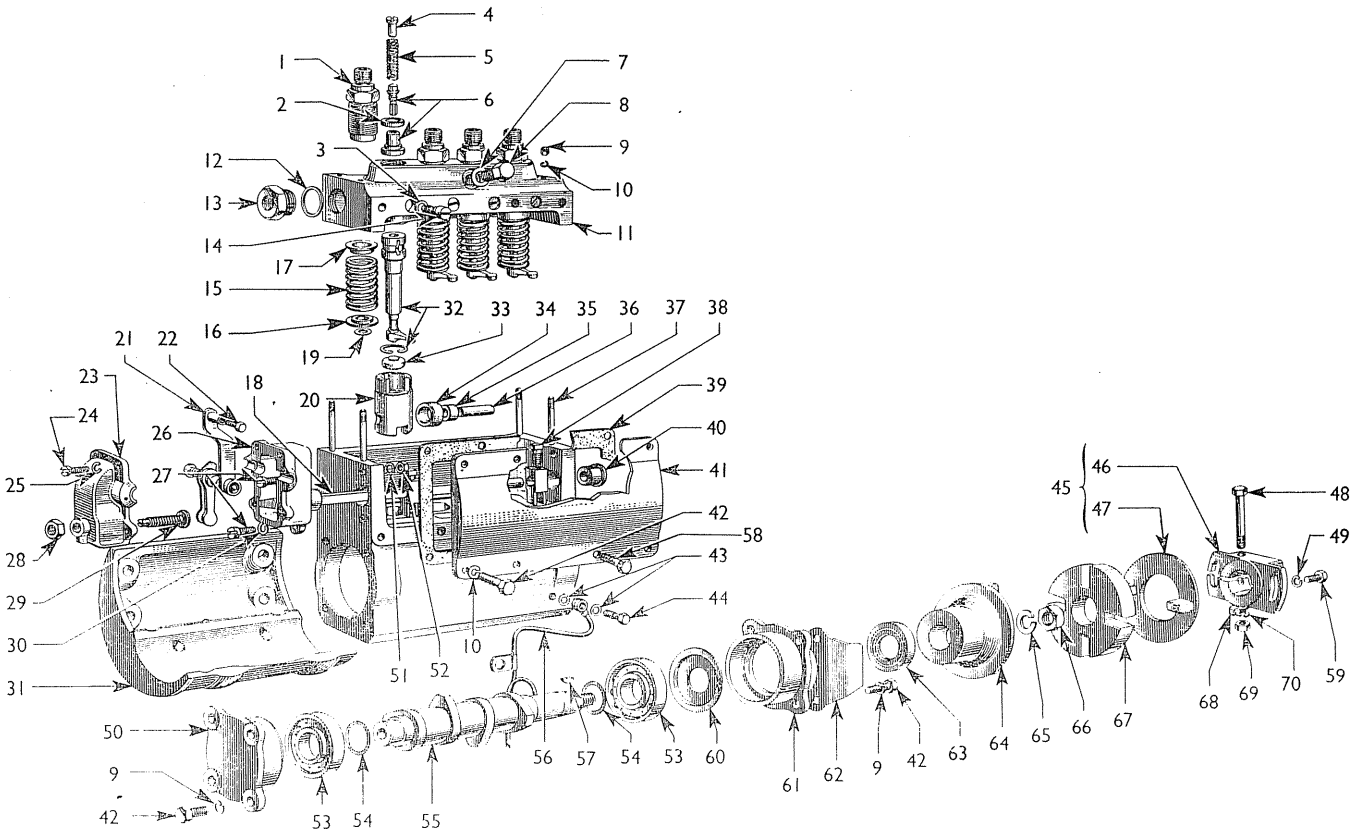
4
5
1
7
2
6
8
3
9
12
10
13
11
14
17
15
32
33
34
35
36
37
38
16
19
21
22
23
18
20
39
24
26
40
25
27
41
42
58
28
43
29
44
30
10
31
51
52
45
46
47
48
49
50
9
42
53
54
55
56
57
54
53
60
61
62
9
42
63
64
65
66
67
68
69
70
59

Ref.	Part No.	Description	Ref.	Part No.	Description

FUEL INJECTION PUMP—STANDARD

1	E1ADDN–993228	...Holder
2	E1ADDN–993230	...Washer
3	118154–ES	...Washer
4	E1ADDN–993243	...Reducer
5	E1ADDN–993231	...Spring
6	E1ADDN–993227	...Valve
7	118194–ES	...Washer
8	E1ADDN–993125	...Screw
9	33796–S	...Nut
10	34805–S	...Lockwasher
11	E1ADDN–993121-B	...Body
12	118305–ES	...Washer
13	E1ADDN–993122	...Connection
14	E1ADDN–993229	...Screw
15	E1ADDN–993232	...Spring
16	E1ADDN–993233	...Disc
17	E1ADDN–993240	...Disc
18	E1ADDN–993211-B	...Rod
19	E1ADDN–993239-B	...Circlip
20	E1ADDN–993235-B	...Body
21	E1ADDN–993215-C	...Lever
22	AB–102/6A-S7	...Screw
23	E1ADDN–993219-C	...Case
24	AB–602/10A-S	...Screw
25	SW–106-S	...Lockwasher
26	E1ADDN–993218-C	...Case
27	118771–ES	...Screw
28	33798–S	...Nut
29	E1ADDN–993220-C	...Screw
30	34805–S	...Lockwasher
31	502E–993167	...Bracket
32	502E–993153	...Barrel assy.
33	E1ADDN–993241-F	...Spacer ·179/·181″
	E1ADDN–993241-G	...Spacer ·183/·185″
	E1ADDN–993241-H	...Spacer ·187/·189″
	E1ADDN–993241-J	...Spacer ·191/·193″
	E1ADDN–993241-K	...Spacer ·195/·197″
34	E1ADDN–993236	...Roller
35	E1ADDN–993238	...Bush
36	E1ADDN–993237	...Pin
37	88485–ES	...Stud
38	E1ADDN–993209	...Screw
39	E1ADDN–993145-B	...Gasket
40	E1ADDN–993210	...Bush
41	E1ADDN–993144-D	...Cover
42	20324–S2	...Screw
43	118170–ES	...Washer
44	E1ADDN–993189	...Bolt
45	E1ADDN–993183	...Coupling assy.
46	E1ADDN–993186	...Flange
47	E1ADDN–993188	...Plate
48	20521–S7/8	...Bolt
49	34826–S	...Lockwasher
50	E1ADDN–993205	...Housing
51	34905–S	...Washer
52	33920–S	...Nut
53	E1ADDN–993203	...Bearing
54	E1ADDN–993202-A	...Shim ·004″
	E1ADDN–993202-B	...Shim ·008″
55	E1ADDN–993201-C	...Camshaft
56	502E–993128	...Pipe
57	74175–S	...Key
58	118788–ES	...Bolt
59	20347–S7/8	...Screw
60	E1ADDN–993206	...Baffle
61	E1ADDN–993204	...Housing
62	E1ADDN–993217	...Indicator
63	E1ADDN–993207	...Seal
64	E1ADDN–993187	...Flange
65	34809–S	...Lockwasher
66	33832–S	...Nut
67	E1ADDN–993184	...Pad
68	E231–CL-9	...Washer
69	117600–ES7	...Nut
70	34806–S	...Lockwasher

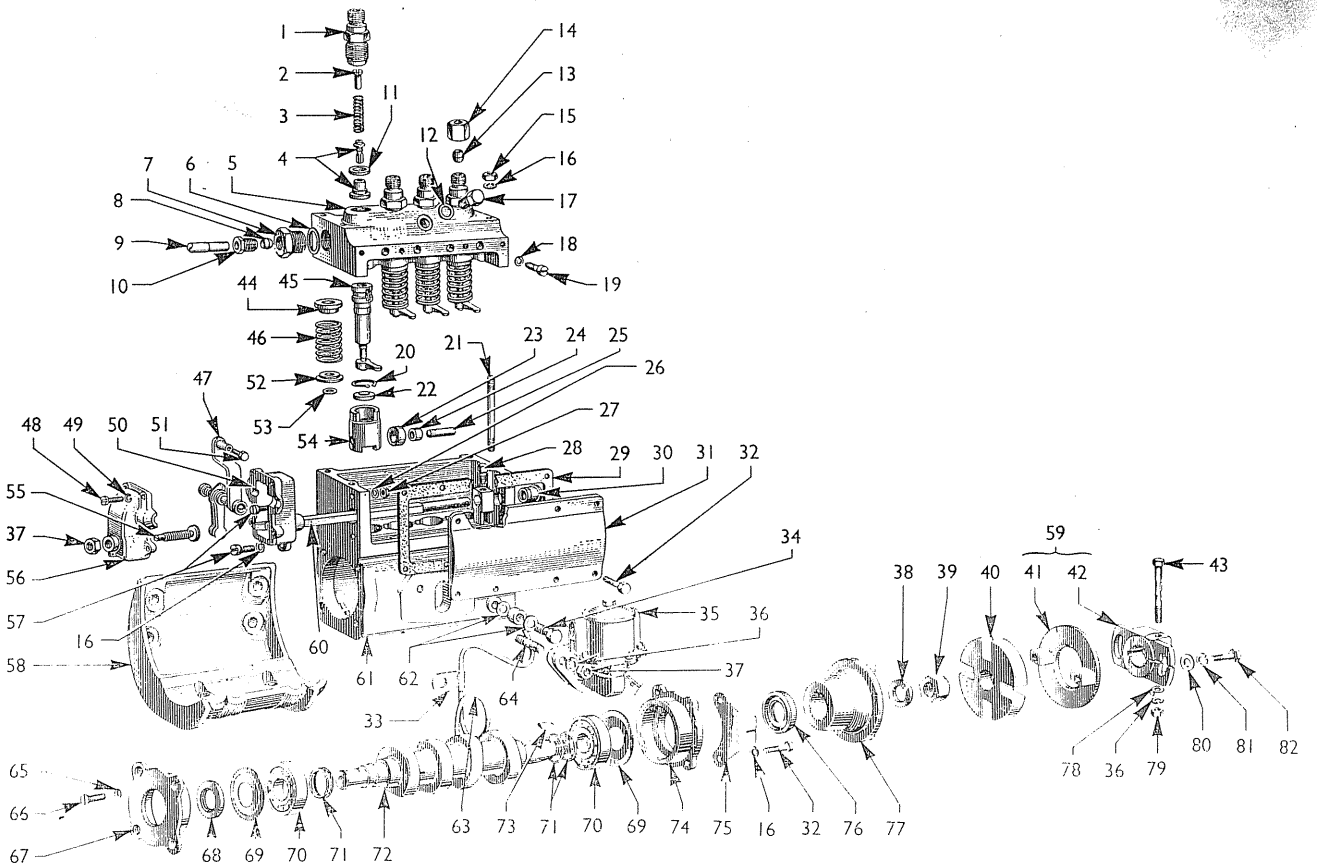
1
2
3
4
5
6
7
8
9
10
11
12
13
14
15
16
17
18
19
20
21
22
23
24
25
26
27
28
29
30
31
32
33
34
35
36
37
38
39
40
41
42
43
44
45
46
47
48
49
50
51
52
53
54
55
56
57
58
59
60
61
62
63
64
65
66
67
68
69
70
71
72
73
74
75
76
77
78
79
80
81
82

FUEL INJECTION PUMP—WITH EXHAUSTER DRIVE

Ref.	Part No.	Description
1	E1ADDN–993228	...Holder
2	E1ADDN–993243	...Reducer
3	E1ADDN–993231	...Spring
4	E1ADDN–993227	...Valve
5	E1ADDN–993121-B	...Body
6	118305–ES	...Washer
7	E1ADDN–993122	...Connection
8	EB–9242	...Ferrule
9	E1ADDN–9337–B	...Pipe
10	EB–9243–A	.. Nut
11	E1ADDN–993230	...Washer
12	118194–ES	...Washer
13	E1ADDN–9242–B	...Ferrule
14	E1ADDN–993178-B	...Nut
15	33796–S	...Nut
16	34805–S	...Lockwasher
17	E1ADDN–993125	...Screw
18	118154–ES	...Washer
19	E1ADDN–993229	...Screw
20	E1ADDN–993239-B	...Circlip
21	88485–ES	...Stud
22	E1ADDN–993241-F	...Spacer ·179/·181″
	E1ADDN–993241-G	...Spacer ·183/·185″
	E1ADDN–993241-H	...Spacer ·187/·189″
	E1ADDN–993241-J	...Spacer ·191/·193″
	E1ADDN–993241-K	...Spacer ·195/·197″
23	E1ADDN–993236	...Roller
24	E1ADDN–993238	...Bush
25	E1ADDN–993237	...Pin
26	34905–S	...Washer
27	33920–S	...Nut
28	E1ADDN–993209	...Screw
29	E1ADDN–993145-B	...Gasket
30	E1ADDN–993210	...Bush
31	E1ADDN–993144-D	...Cover
32	20324–S2	...Screw
33	E1ADDN–993130	...Clip
34	E1ADDN–993189	...Bolt
35	502E–9350	...Pump
36	34806–S2	...Lockwasher
37	33798–S2	.. Nut
38	34809–S	...Lockwasher
39	33846–S2	...Nut
40	E1ADDN–993184	...Pad
41	E1ADDN–993188	...Plate
42	E1ADDN–993186	...Flange
43	20521–S7/8	...Screw
44	E1ADDN–993240	...Disc
45	502E–993153	...Barrel assy.
46	E1ADDN–993232	...Spring
47	E1ADDN–993215-C	...Lever assy.
48	AB–602/10A-S7	...Screw
49	SW–106–S2	...Lockwasher
50	E1ADDN–993218-C	...Case
51	AB–102/6A-S7	...Screw
52	E1ADDN–993233	...Disc
53	E1ADDN–993234	...Shim
54	E1ADDN–993235-B	.. Body
55	E1ADDN–993220-C	...Screw
56	E1ADDN–993219-C	...Case
57	118771–ES	...Screw
58	502E–993167	...Bracket
59	E1ADDN–993183	...Coupling
60	E1ADDN–993211-B	...Rod
61	502E–993200	...Cambox
62	118170–ES	...Washer
63	502E–993128	...Pipe
64	117453–ES	...Stud
65	118199–ES	...Lockwasher
66	24649–S2	...Screw
67	502E–993205	...Housing
68	502E–993207	...Seal
69	E1ADDN–993206	...Baffle
70	E1ADDN–993203	...Bearing
71	E1ADDN–993202-A	...Shim ·004″
	E1ADDN–993202-B	...Shim ·008″
72	502E–993201	...Camshaft
73	74175–S	...Key
74	E1ADDN–993204	...Housing
75	E1ADDN–993217	...Indicator
76	E1ADDN–993207	...Seal
77	E1ADDN–993187	...Flange
78	E231–CL–9	...Washer
79	117600–ES7	...Nut
80	FW–105–AS7	...Washer
81	34826–S	...Lockwasher
82	20347–S7/8	...Screw

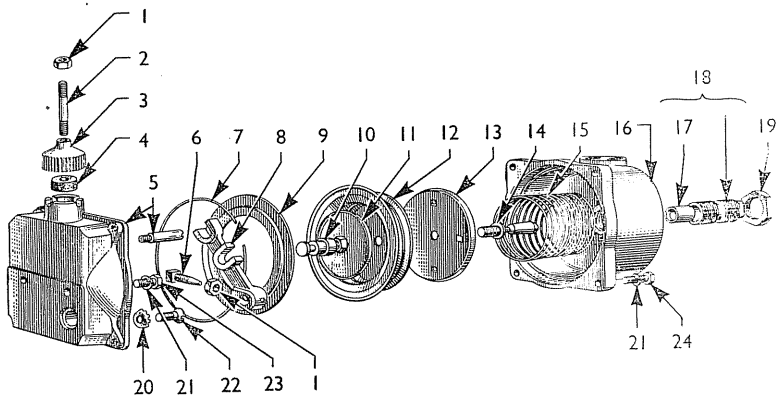
1
2
3
4
5
6
7
8
9
10
11
12
13
14
15
16
17
18
19
20
21
22
23
1
21
24

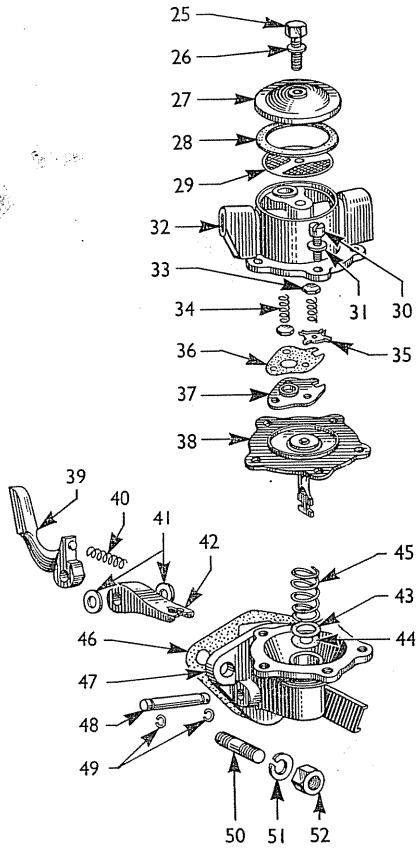
25
26
27
28
29
32
33
34
31
30
36
35
37
38
39
40
41
42
45
43
46
44
47
48
49
50
51
52

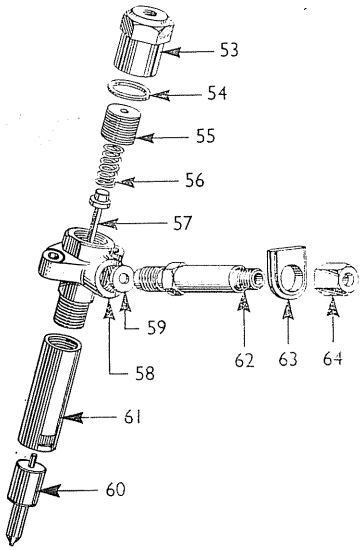
53
54
55
56
57
59
58
62
63
64
61
60

Ref.	Part No.	Description	Ref.	Part No.	Description

INJECTION PUMP GOVERNOR, FUEL PUMP AND INJECTOR

1	33921–S2	...Nut
2	88390–ES2	...Stud
3	E1ADDN–993105-B	...Cap
4	E1ADDN–993104	...Capsule
5	E1ADDN–993102	...Case assy.
6	118781–ES	...Screw
7	E1ADDN–993119	...Ring
8	E1ADDN–993106-B	...Link
9	E1ADDN–993118	...Disc
10	E1ADDN–993117	...Guide
11	E1ADDN–993116	...Plate
12	E1ADDN–993115-B	...Diaphragm
13	E1ADDN–993114	...Plate
14	E1ADDN–993113-B	...Valve
15	510E–993120	...Spring
16	E1ADDN–993108-B	...Case
17	E1ADDN–993111	...Bush
18	E1ADDN–993109	...Guide
19	117778–ES	...Nut
20	118199–ES7	...Washer
21	34805–S	...Lockwasher
22	24649–S2	...Screw
23	20324–S2	...Screw
24	20364–S2	...Screw
25	119020–ES7/8	...Screw
26	YE–9357	...Washer
27	YE–9355	...Cover
28	YE–9364	...Gasket
29	YE–9365-A	...Screen
30	31612–S2	...Screw
31	34803–S2	...Lockwasher
32	502E–9353	...Body
33	EB-9358	...Valve
34	YE–9360	...Spring
35	YE–9406-A	...Retainer
36	YE–9422	...Gasket
37	E04A–9421	...Plate
38	E04A–9398-B	...Diaphragm
39	502E–9376	...Arm
40	YE–9380	...Spring
41	119265–ES7	...Washer
42	YE–9381	...Link
43	100E–9411	...Washer
44	100E–9469	...Washer
45	502E–9396	...Spring
46	Y–9374	...Gasket
47	E04A–9413-B	...Body
48	YE–9378	...Pin
49	YE–9379	...Ring
50	117453–ES	...Stud
51	34806–S2	...Lockwasher
52	33798–S2	...Nut
53	E1ADDN–993196-B	...Nut
54	E1–CL–9	...Washer
55	E1ADDN–993195	...Nut
56	E1ADDN–993193	...Spring
57	E1ADDN–993192	...Spindle assy.
58	E1ADDN–993190	...Body assy.
59	E1ADDN–993198	...Washer
60	E82–Z–9	...Nozzle
61	E1ADDN–993191	...Nut
62	E1ADDN–993197-B	...Adaptor
63	E1ADDN–993156-B	...Seal
64	E1ADDN–993178-B	...Nut

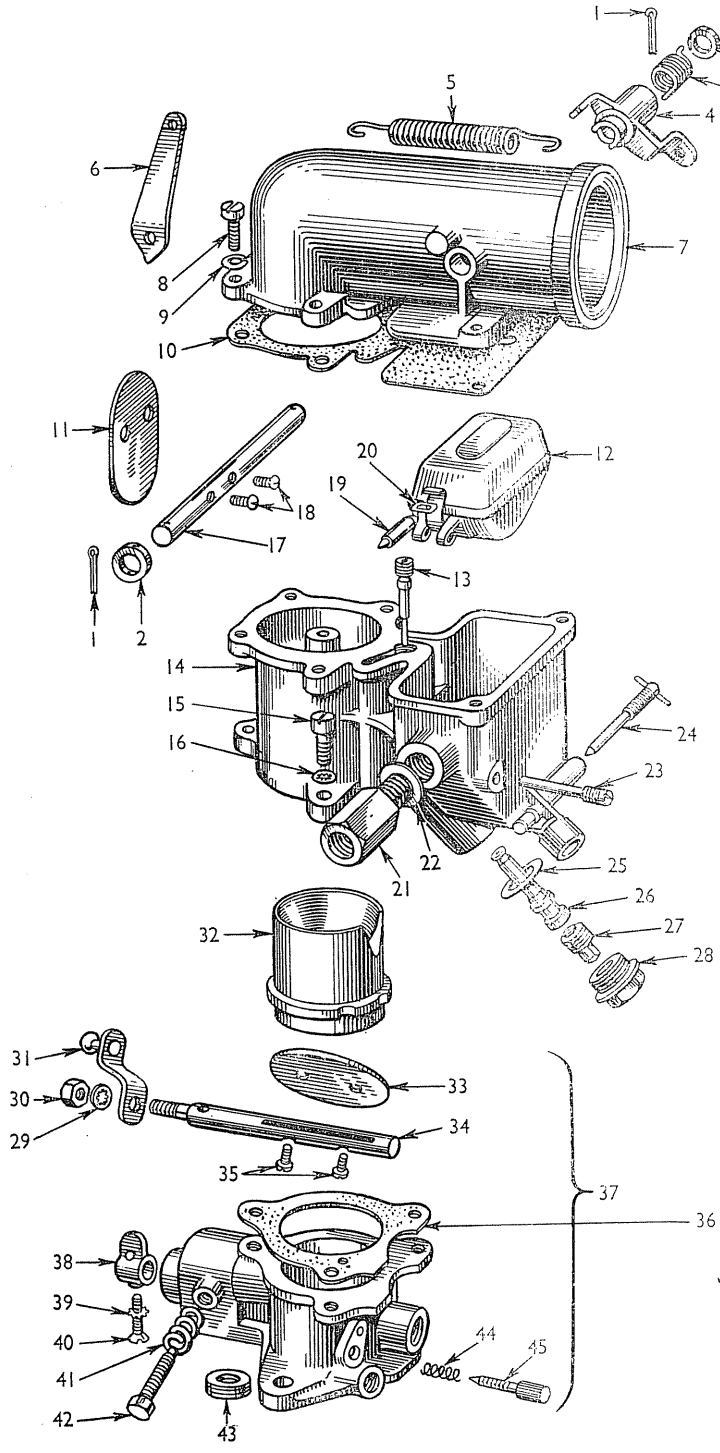
1
2
3
4
5
6
7
8
9
10
11
12
13
14
15
16
17
18
19
20
21
22
23
24
25
26
27
28
29
30
31
32
33
34
35
36
37
38
39
40
41
42
43
44
45

Ref.	Part No.	Description

CARBURETTOR

Ref.	Part No.	Description
1	72008–S	...Split pin
2	N–9568	...Collar
3	N–9589	...Spring
4	E1ADN–9551	...Lever
5	E1ADN–9560	...Spring
6	E1ADN–9595	...Bracket
7	E1ADN–9521	...Body
8	N–9677	...Screw
9	34843–S	...Lockwasher
10	N–9519	...Gasket
11	N–9549-C	...Plate
12	N–9550-B	...Float assy.
13	E1ADKN–9542-A	...Tube
14	E1ADKN–9513-B	...Body (Vap. Oil)
	E1ADN–9513	...Body (Petrol)
15	N–9697	...Screw
16	34805–S	...Lockwasher
17	N–9546-B	...Shaft
18	N–9611-C	...Screw
19	N–9566	...Needle
20	N–9553	...Clip
21	E1ADKN–9569	...Seating
22	N–9567	...Gasket
23	N–9558	...Pivot
24	E27N–9185	...Valve
25	N–9563	...Gasket
26	E1ADKN–9534-B	...Jet (Vap. Oil)
	E1ADN–9534	...Jet (Petrol)
27	N–9533-B	...Jet (Vap. Oil)
	E27N–9533	...Jet (Petrol)
28	E1ADKN–9522-B	...Plug
29	34903–S	...Lockwasher
30	117535–ES	...Nut
31	E1ADKN–9584	...Lever
32	N–9586-B	...Venturi
33	N–9585-B	...Plate
34	N–9582-C	...Shaft
35	N–9690	...Screw
36	N–9516	...Gasket
37	E1ADKN–9515	...Body (Vap.Oil)
	E1ADN–9515	...Body (Petrol)
38	N–9583-B	...Stop
39	34952–S	...Lockwasher
40	N–9687	...Screw
41	N–9682	...Spring
42	N–9681	...Screw
43	74113–S	...Plug
44	N–9578	...Spring
45	E1ADKN–9577	...Needle

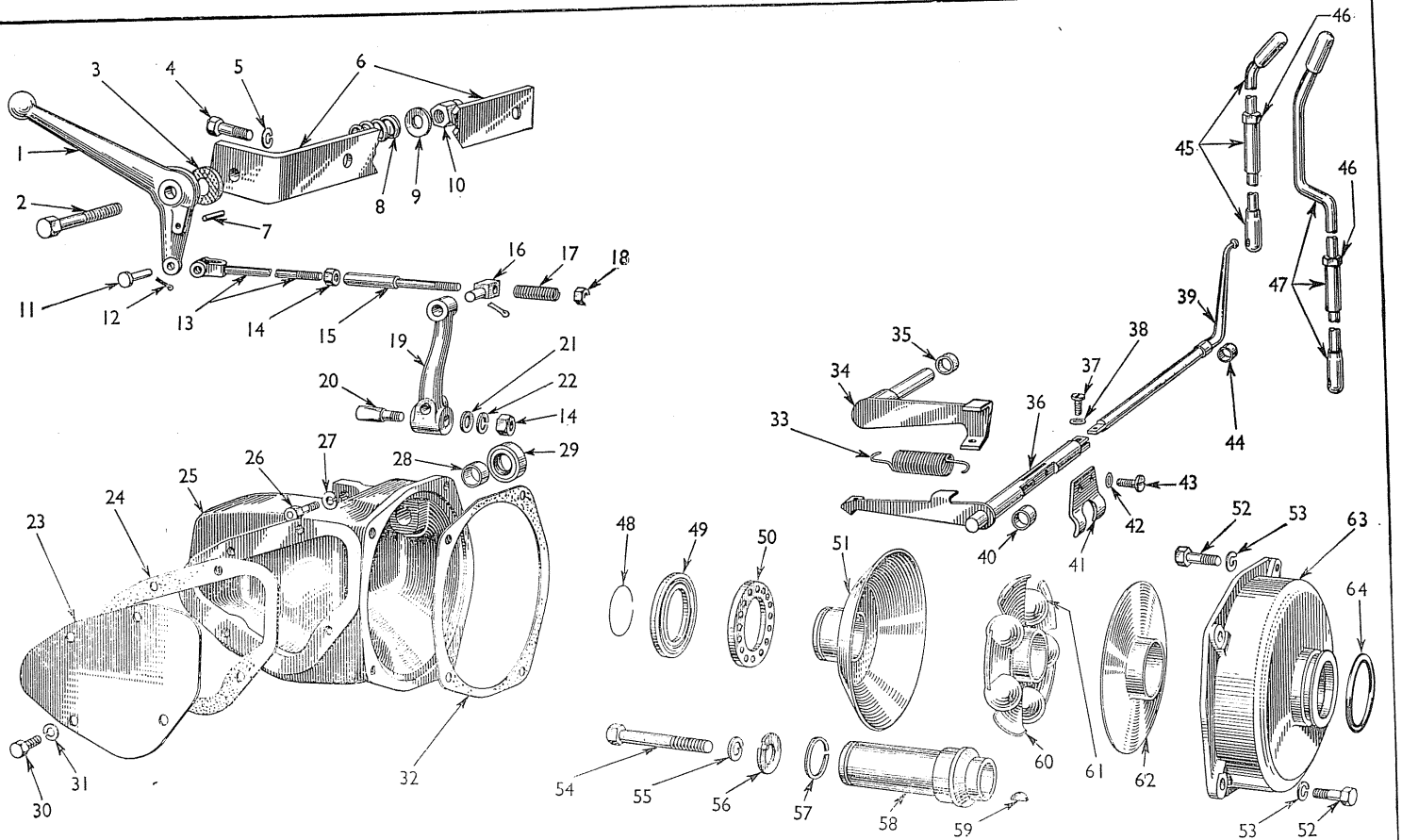
1
2
3
4
5
6
7
8
9
10
11
12
13
14
15
16
17
18
19
20
21
22
14
27
28
29
25
26
24
23
30
31
32
48
49
50
51
52
53
63
64
60
61
62
54
55
56
57
58
59
53
52
35
34
33
36
37
38
39
40
41
42
43
44
45
46
47
46

GOVERNOR AND LINKAGE—PETROL AND VAP. OIL

Ref.	Part No.	Description
1	E1ADKN–9805–A	...Lever (Vap. Oil)
	†E1ADKN–9805–B	...Lever (Vap. Oil)
	E1ADN–9805–A	...Lever (Petrol)
	†E1ADN–9805–B	...Lever (Petrol)
2	20547–S2	...Bolt
3	E1ADKN–8487–B	...Pad
4	20348–S2	...Screw
5	34807–S	...Lockwasher
6	E1ADKN–19206	...Bracket
7	73296–ES	...Pin
8	E1ADKN–19243	...Spring
9	44731–S2	...Washer
10	34447–ES	...Locknut
11	73877–S7/8	...Clevis pin
12	72003–S	...Split pin
13	E1ADKN–19198	...Rod assy.
14	33796–S	...Nut
15	E1ADKN–19098	...Sleeve
16	E1ADKN–19211	...Block
17	E1ADKN–19246	...Spring
18	34441–ES	...Nut
19	E1ADKN–19236–B	...Lever
20	E1ADKN–19079	...Pin
21	44719–S	...Washer
22	34805–S	...Lockwasher
23	E1ADKN–19156	...Cover
24	E1ADKN–19157	...Gasket
25	E1ADKN–19158	...Housing
26	20428–S	...Screw
27	34827–S	...Lockwasher
28	E1ADKN–19162	...Bush
29	E1ADKN–19226	...Seal
30	20308–S	...Screw
31	34825–S	...Lockwasher
32	E1ADKN–19168	...Gasket
33	E12–CL–9	...Spring
34	E1ADKN–19068	...Lever
35	E1ADKN–19084–B	...Felt
36	E1ADKN–19220–B	...Shaft
37	38203–S2	...Screw
38	34902–S2	...Washer
39	E1ADKN–18189	...Spindle (Vap. Oil)
	E1ADKN–19189–B	.. Spindle (Petrol)
40	E1ADKN–19251	...Spacer
41	E1ADKN–19234–B	...Fork
42	34903–S	...Lockwasher
43	38193–S	...Screw
44	E1ADKN–19223	...Bush
45	E1ADN–19190	...Rod (Petrol)
46	33796–S	...Nut
47	E1ADKN–19190–B	...Rod (Vap. Oil)
48	E1ADKN–19253	...Retainer
49	E1ADKN–19252	...Sleeve
50	E1ADKN–19245–A	...Bearing
51	E1ADKN–19240	...Plate
52	20366–S	...Screw
53	34826–S	...Lockwasher
54	45513–S	...Screw
55	34826–S	...Lockwasher
56	E1ADKN–19258	...Washer
57	E1ADKN–19254	...Ring
58	E1ADKN–19256	...Shaft
59	74175–S	...Key
60	E1ADKN–19268	...Driver
61	119815–ES	...Ball
62	E1ADKN–19266	...Race
63	E1ADKN–19160–B	...Body
64	E1ADKN–19167	...Seal

† Used with Tachometer

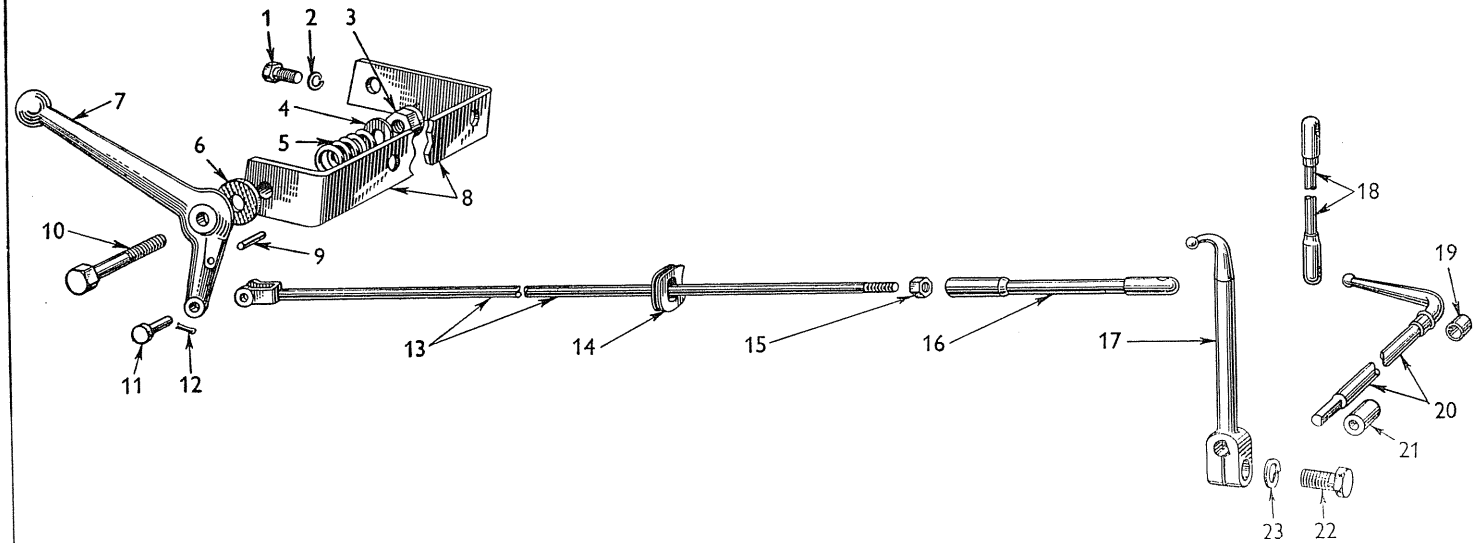
1
2
3
4
5
6
7
8
9
10
11
12
13
14
15
16
17
18
19
20
21
22
23

Ref.	Part No.	Description	Ref.	Part No.	Description

THROTTLE LINKAGE—DIESEL

1	20348–S2	...Bolt
2	34807–S	...Lockwasher
3	34447–ES	...Locknut
4	44731–S	...Washer
5	E1ADKN–19243	...Spring
6	E1ADKN–8487-B	...Pad
7	E1ADN–9805-A	...Lever
8	E22–JB-9	...Bracket
9	73296–ES	...Pin
10	20547–S2	...Bolt
11	73877–S7/8	...Clevis pin
12	72003–S	...Split pin
13	E1ADDN–19198-B	...Rod
14	E1ADKN–19212	...Grommet
15	33796–S	...Locknut
16	N–19064	...Extension
17	E41–JB-5	...Lever
18	E1ADDN–9747	...Rod
19	E1ADKN–19223	...Bush
20	E1ADDN–9733	...Spindle
21	E1ADDN–66026	...Bush
22	20325–S	...Screw
23	34805–S2	...Lockwasher

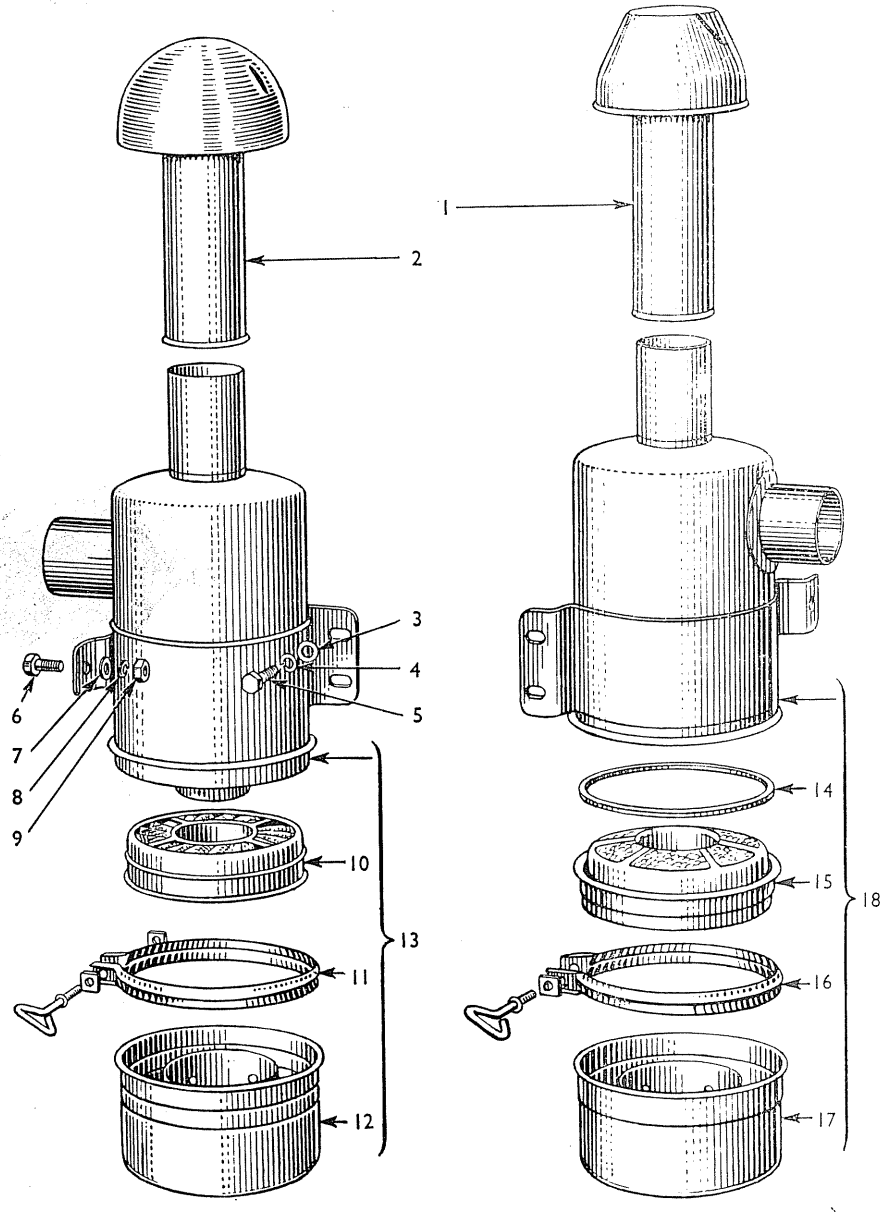
1
2
3
4
5
6
7
8
9
10
11
12
13
14
15
16
17
18

Ref.	Part No.	Description	Ref.	Part No.	Description

AIR CLEANERS

1	E1ADKN-9680-B	...Cleaner (Primary)
2	E1ADKN-9680-B	..Cleaner (Primary)
3	44724-S	...Washer
4	34806-S	...Lockwasher
5	20347-S2	...Screw
6	20366-S	...Screw
7	44724-S	..Washer
8	34806-S	...Lockwasher
9	33797-S	...Nut
10	E241-CL-9	...Element
11	E1ADKN-18246-B	...Clamp
12	E1ADKN-18243-C	...Bath
13	E1ADKN-18205-B	...Cleaner assy.
14	E243-CL-9	...Seal
15	E242-CL-9	...Element
16	E1ADKN-18246-A	...Clamp
17	E1ADKN-18243-A	...Bath
18	E1ADKN-18205-B	...Cleaner assy.

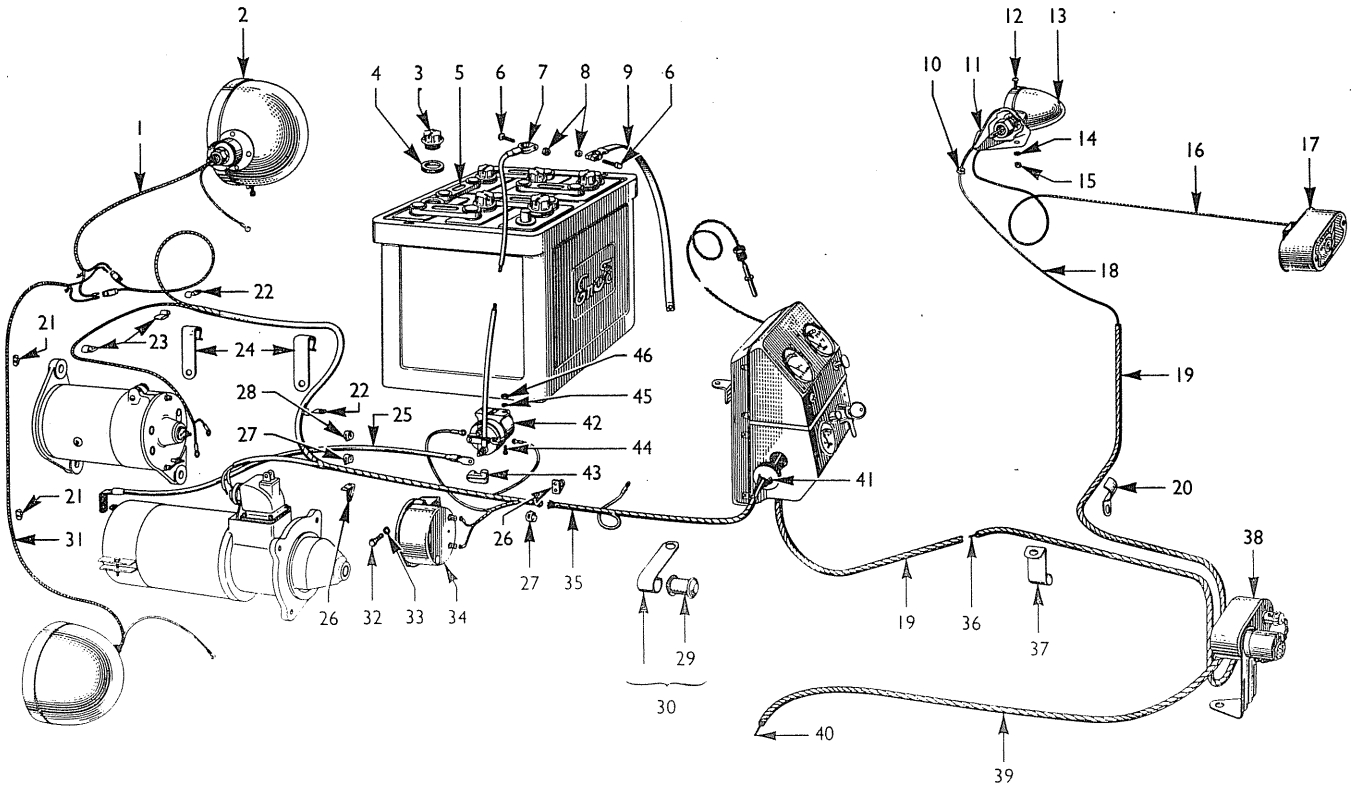
1
2
3
4
5
6
7
8
9
10
11
12
13
14
15
16
17
18
19
20
21
22
23
24
25
26
27
28
29
30
31
32
33
34
35
36
37
38
39
40
41
42
43
44
45
46

Ref.	Part No.	Description	Ref.	Part No.	Description

WIRING—DIESEL

1	E1ADKN–14427	...Wire
2	E1ADKN–13002	...Headlamp R.H.
3	E1ADKN–13003	...Headlamp L.H.
	E0A–10720	...Plug
4	E0A–10663-B	...Washer
5	E1ADDN–10657-B	...Battery
6	23017–S16	...Bolt
7	E1ADDN–14300-B	...Cable
8	33797–S16	...Nut
9	E1ADDN–14301	...Cable
10	B–16386	...Grommet
11	E1ADKN–13244	...Bracket
12	36824–S7/8	...Screw
13	E1ADKN–13202	...Side lamp
14	34805–S7/8	...Lockwasher
15	34055–S7/8	...Nut
16	E1ADKN–14412	...Wire
17	E1ADKN–13404-B	...Rear lamp R.H.
	E1ADKN–13405-B	...Rear lamp L.H.
18	E1ADKN–14407	...Wire
19	E1ADKN–14539	...Conduit
20	N–14599	...Support
21	ET6–14660	...Clip
22	B–14577-A	...Clip
23	B–14565	...Clip
24	E22–ND-9	...Clip
25	E1ADDN–14431-B	...Cable
26	E1ADKN–14633	...Bracket
27	E493A–14666	...Clip
28	ET6–14661	...Clip
29	B–14552-A	...Bush
30	E27N–14545	...Support assy.
31	E1ADKN–14425	...Wire
32	20347–S2	...Screw
33	34806–S	...Lockwasher
34	E1ADKN–13802-B	...Horn
35	E1ADDN–14401-B	...Main wiring
36	E1ADKN–14405-B	...Wire
37	E1ADKN–14599	...Support
38	E1ADKN–13544-C	...Lamp
39	E4–ND-9	...Conduit
40	E1ADKN–14324	...Wire
41	7V–14603-A	...Grommet
42	E1ADDN–11450-B	...Switch
43	E1ADDN–14693	...Cover
44	27081–S2	...Screw
45	34803–S2	...Lockwasher
46	34141–S2	...Nut

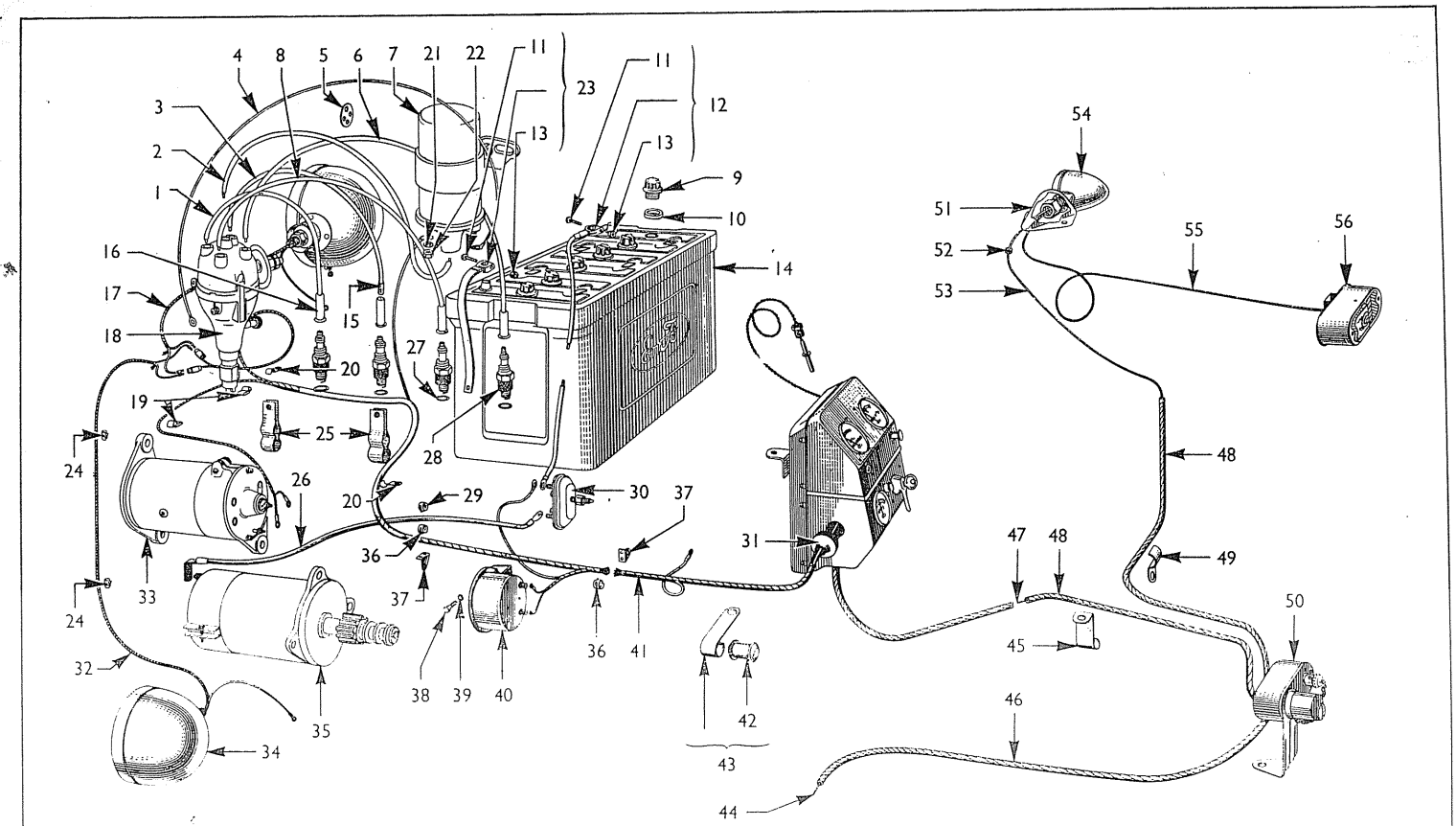
1
2
3
4
5
6
7
8
9
10
11
12
13
14
15
16
17
18
19
20
21
22
23
24
25
26
27
28
29
30
31
32
33
34
35
36
37
38
39
40
41
42
43
44
45
46
47
48
49
50
51
52
53
54
55
56

Ref.	Part No.	Description

WIRING—PETROL AND VAP. OIL

Ref.	Part No.	Description
1	100E–12283	...Wire (Coil)
	E1ADKN–12282-B	...Wire (Mag)
2	E1ADKN–14303	...Wire
3	E1ADKN–12283-A	.. Wire (Coil)
	E1ADKN–12283-B	...Wire (Mag)
4	E1ADKN–14302	...Wire
5	E3–CQ-9	...Spacer
6	E1ADKN–12285-A	...Wire (Coil)
	E1ADKN–12285-B	...Wire (Mag)
7	E0TA–12024-B	.. Coil assy.
8	E1ADKN–12284-A	...Wire (Coil)
	E1ADKN–12284-B	...Wire (Mag)
9	E493A–10720	...Plug
10	E0A–10663-A	...Washer
11	23017–S16	...Bolt
12	E1ADKN–14300-A	...Cable
13	33797–S16	...Nut
14	E0A–10657-E	...Battery
15	78E–14453	...Terminal
16	E1ADKN–14505	...Cover
17	E1ADKN–14427	...Wire
18	E1ADKN–12100-B	...Distributor
19	B–14565	...Clip
20	B–14577-A	...Clip
21	44713–S7/8	...Washer
22	AN–202-K-S7	...Nut
23	E1ADKN–14301-A	...Connector
24	ET6–14660	...Clip
25	E1ADKN–9295-C	...Clip
26	E1ADKN–14431	...Cable
27	52–12410	...Gasket
28	E1ADKN–12405-A	...Spark plug
29	ET6–14661	...Clip
30	ET6–11450	...Switch
31	7V–14603-A	...Grommet
32	E1ADKN–14425	...Wire
33	E1ADKN–10000-C	...Generator
34	E1ADKN–13002	...Headlamp R. H.
	E1ADKN–13003	...Headlamp L. H.
35	E1ADKN–11001-C	...Starter motor
36	E493A–14666	...Clip
37	E1ADKN–14633	...Bracket
38	20347–S2	...Screw
39	34806–S	...Lockwasher
40	E1ADKN–13802-B	...Horn
41	E1ADKN–14401-C	...Main Wiring (Coil)
	E1ADKN–14401-D	...Main Wiring (Mag)
42	B–14552-A	...Bush
43	E27N–14545	...Support
44	E1ADKN–14324	...Wire
45	E1ADKN–14599	...Clip
46	E4–ND-9	...Conduit
47	E1ADKN–14405-B	...Wire
48	E1ADKN–14539	...Conduit
49	N–14599	...Clip
50	E1ADKN–13544-C	...Lamp
51	E1ADKN–13244	...Bracket
52	B–16386	...Grommet
53	E1ADKN–14407	...Wire
54	E1ADKN–13202	...Side lamp
55	E1ADKN–14412	...Wire
56	E1ADKN–13404-B	...Rear lamp R.H.
	E1ADKN–13405-B	...Rear lamp L.H.

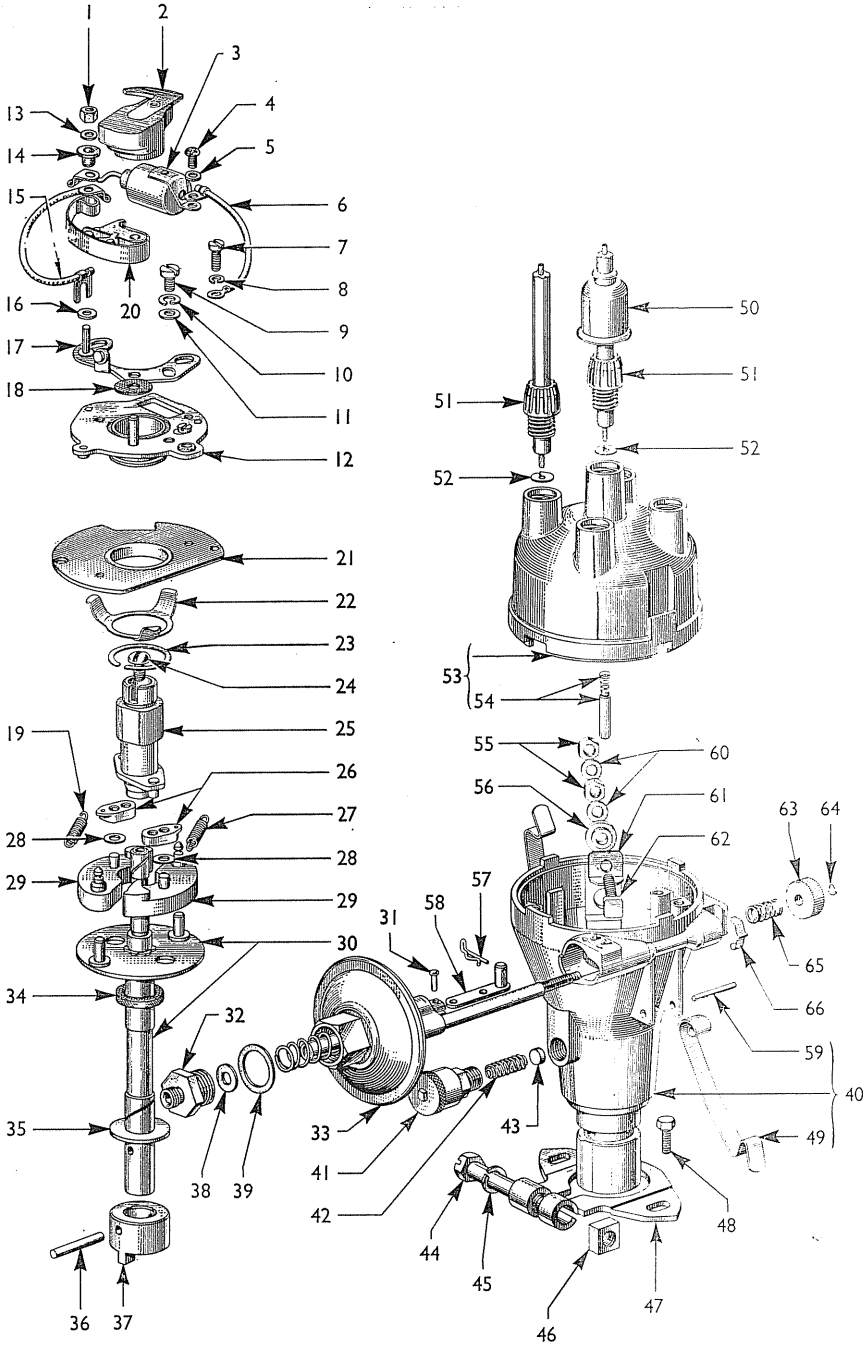
1
2
3
4
5
6
7
8
9
10
11
12
13
14
15
16
17
18
20
21
22
23
24
25
26
27
28
29
30
31
32
33
34
35
36
37
38
39
40
41
42
43
44
45
46
47
48
49
50
51
52
53
54
55
56
57
58
59
60
61
62
63
64
65
66

Ref.	Part No.	Description
1	117514–ES	...Nut
2	E1ADKN–12200-B	...Rotor
3	E0TTA–12300-C	...Condenser
4	AB–604/3-A	...Screw
5	118126–ES	...Washer
6	E0TTA–12264	...Wire
7	AB–604/6-A	...Screw
8	118281–ES	...Lockwasher
9	AB–602/4-A	...Screw
10	YE–12241-B	...Lockwasher
11	119258–ES	...Washer
12	E0TTA–12152-C	...Plate
13	118104–ES7/8	...Washer
14	E0TA–12233-B	...Bush
15	E0TTA–12216	...Wire
16	118116–ES	...Washer
17	E0TTA–12160-B	...Bracket
18	E62A–12153	...Washer
19	E1ADKN–12191-B	...Spring
20	E0TA–12162-B	...Arm
21	E0TTA–12394-B	...Plate
22	E0TTA–12146-A	...Retainer
23	E0TTA–12207-A	...Ring
24	118660–ES7	...Screw
25	E1ADKN–12179	...Cam
26	E0TA–12185	...Toggle
27	E1ADKN–12192	...Spring
28	118131–ES	...Washer
29	E0TA–12188	...Weight
30	E1ADKN–12175-B	...Shaft assy.
31	119921–ES	...Rivet
32	E0TA–12382	...Union
33	E1ADKN–12371	...Unit assy.
34	E0TA–12239	...Washer
35	118225–ES	...Washer
36	119158–ES	...Pin
37	E1ADKN–12193-B	...Collar
38	118128–ES	...Washer
39	118263–ES	...Washer
40	E0TTA–12130-A	...Body assy.
41	E1ADKN–12135	...Lubricator
42	E0TTA–12134	...Spring
43	E0TTA–12141	...Pad
44	118763–ES	...Bolt
45	34805–S	...Lockwasher
46	117596–ES	...Nut
47	E0TA–12227	...Clamp
48	20324–S2	...Screw
49	E0TTA–12124-B	...Clip
50	7V–12113	...Seal
51	7V–12098	...Nut
52	7V–12039	...Washer
53	E1ADKN–12116	...Cap assy.
54	E0TA–12122	...Brush
55	119212–ES	...Nut
56	E0TTA–12046	...Bush
57	E0TA–12314	...Clip
58	E0TA–12375	...Arm
59	119964–ES	...Pin
60	119258–ES	...Washer
61	YE–12214-B	...Plate
62	E0TTA–12049	...Terminal
63	E0TA–12396	...Nut
64	E0TA–12388	...Ring
65	E0TTA–12398-A	...Spring
66	E0TA–12373	...Spring

DISTRIBUTOR

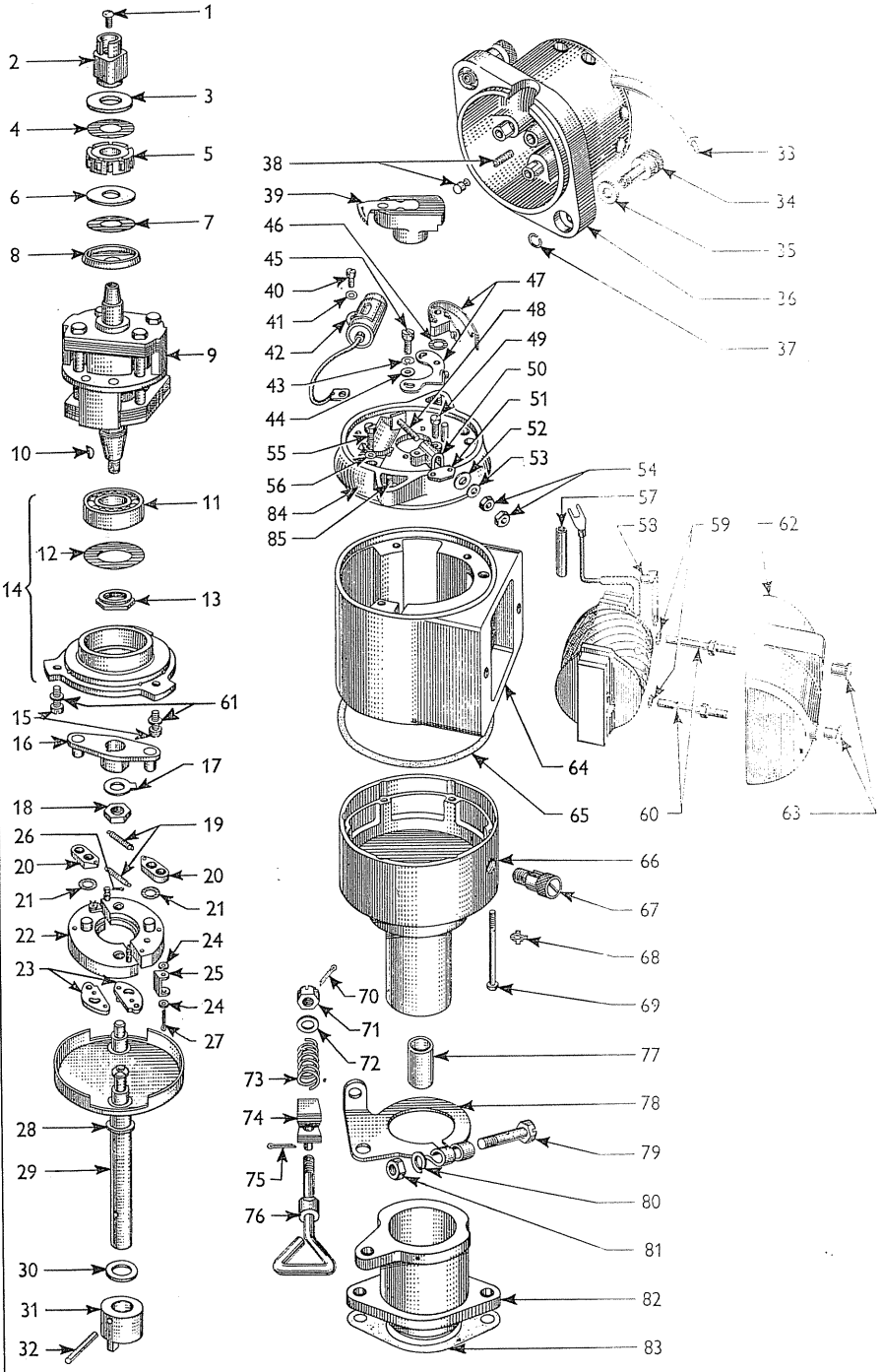
1
2
3
4
5
6
7
8
9
10
11
12
13
14
15
16
17
18
19
20
21
22
23
24
25
26
27
28
29
30
31
32
33
34
35
36
37
38
39
40
41
42
43
44
45
46
47
48
49
50
51
52
53
54
55
56
57
58
59
60
61
62
63
64
65
66
67
68
69
70
71
72
73
74
75
76
77
78
79
80
81
82
83
84
85

MAGNETO

Ref.	Part No.	Description
1	118660–ES7/8	...Screw
2	E31–CR–9	...Cam
3	E40–CR–9	...Felt
4	E39–CR–9	...Washer
5	E48–CR–9	...Bearing
6	118232–ES7/8	...Washer
7	E41–CR–9	...Felt
8	E38–CR–9	...Washer
9	E33–CR–9	...Rotor
10	E44–CR–9	...Key
11	YE–10094	...Bearing
12	E37–CR–9	...Washer
13	E42–CR–9	...Locknut
14	E36–CR–9	...Housing
15	118685–ES7	...Screw
16	E34–CR–9	...Foot
17	E46–CR–9	...Washer
18	117603–ES	...Nut
19	E49–CR–9	...Spring
20	E9–CR–9	...Toggle
21	118179–ES	...Washer
22	E15–CR–9	...Weight
23	E17–CR–9	...Weight
24	118107–ES7/8	...Washer
25	E16–CR–9	...Felt
26	72000–S	...Split pin
27	72015–S	...Split pin
28	118299–ES	...Washer
29	E10–CR–9	...Shaft
30	118231–ES	...Washer
31	E1ADKN–12193–B	...Collar
32	119958–ES	...Pin
33	E43–CR–9	...Wire
34	E27–CR–9	...Screw
35	118173–ES7/8	...Washer
36	E23–CR–9	...Cap
37	E29–CR–9	...Ring
38	E62A–12122	...Brush assy.
39	E30–CR–9	...Rotor
40	118689–ES7/8	...Screw
41	118113–ES7/8	...Washer
42	E0TTA–12300–B	...Condenser
43	YE–12241–B	...Washer
44	119258–ES	...Washer
45	119691–ES10	...Screw
46	E62A–12153	...Washer
47	E25–CR–9	...Contact assy.
48	E14–CR–9	...Screw
49	118688–ES7/8	...Screw
50	E12–CR–9	...Bush
51	E13–CR–9	...Plate
52	E28–CR–9	...Washer
53	119258–ES	...Washer
54	117517–ES	...Nut
55	118690–ES7/8	...Screw
56	118117–ES7/8	...Washer
57	E22–CR–9	...Sleeve
58	E21–CR–9	...Clip
59	118112–ES7/8	...Washer
60	E20–CR–9	...Stud
61	118149–ES	...Washer
62	E18–CR–9	...Cover
63	E19–CR–9	...Screw
64	E32–CR–9	...Body
65	E35–CR–9	...Gasket
66	E11–CR–9	...Base assy.
67	119795–ES7/8	...Lubricator
68	E47–CR–9	...Washer
69	118683–ES7/8	...Screw
70	72003–S	...Split pin
71	33975–S	...Nut
72	44722–S	...Washer
73	N–9709–A	...Spring
74	E4–CR–9	...Block
75	72009–S	...Split pin
76	E3–CR–9	...Handle
77	YE–12132	...Bush
78	E2–CR–9	...Plate
79	20445–S7/8	...Bolt
80	34825–S7/8	...Lockwasher
81	33782–S7/8	...Nut
82	E5–CR–9	...Housing
83	E1ADKN–12143	...Gasket
84	E24–CR–9	...Base assy.
85	E26–CR–9	.. Stud

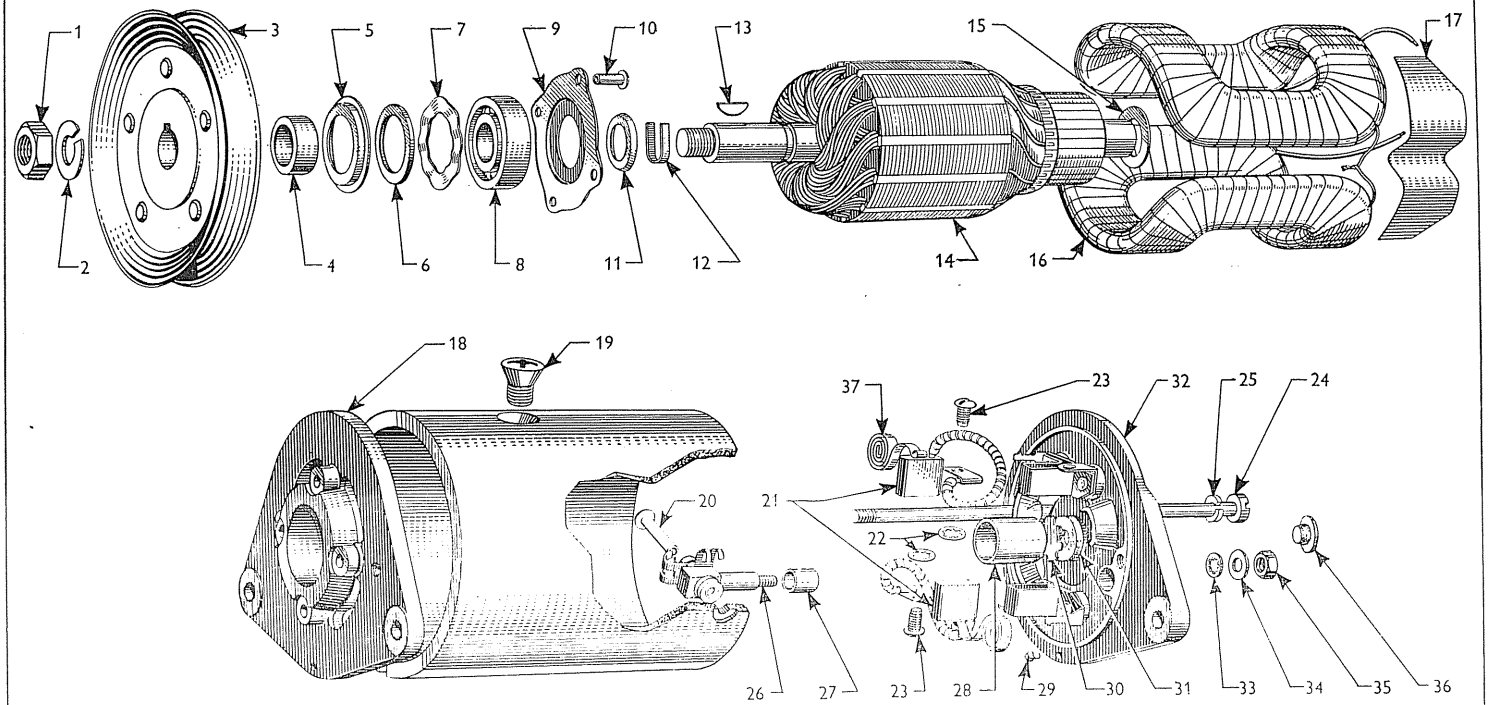
1
2
3
4
5
6
7
8
9
10
11
12
13
14
15
16
17
18
19
20
21
22
23
23
24
25
26
27
28
29
30
31
32
33
34
35
36
37

Ref.	Part No.	Description	Ref.	Part No.	Description

GENERATOR

1	33913–ES	...Nut
2	34943–S2	...Lockwasher
3	E1ADKN–10130-D	...Pulley
4	E93A–10097-B	...Collar
5	YE–10113	...Retainer
6	YE–10160	...Felt
7	YE–10114	...Washer
8	E27N–10094-B	...Bearing
9	YE–10098-B	...Plate
10	119930–ES	...Rivet
11	E93A–10095	...Retainer
12	E93A–10099	...Ring
13	74172–S	...Key
14	E0TA–10005	...Armature
15	E93A–10230	...Washer
16	E27N–10175-C	...Coils
17	E62A–10193	...Insulator
18	E27N–10139-C	...Plate
19	118861–ES	...Screw
20	119437–ES	...Rivet
21	E93A–10043	...Brush kit
22	118203–ES2	...Lockwasher
23	118702–ES7/3	...Screw
24	E0TA–10166	...Bolt
25	34805–S	...Lockwasher
26	E93A–10184-B	...Terminal
27	E93A–10185	...Insulator
28	E0TA–10128-B	...Bush
29	7W–10088	...Dowel
30	E0TA–10115	...Retainer
31	E0TA–10147	...Felt
32	E27N–10129-D	...Plate
33	34918–S	...Lockwasher
34	44819–S	...Washer
35	FN–104-K	...Nut
36	E24–CQ-9	...Plug
37	E88C–10068	...Springs

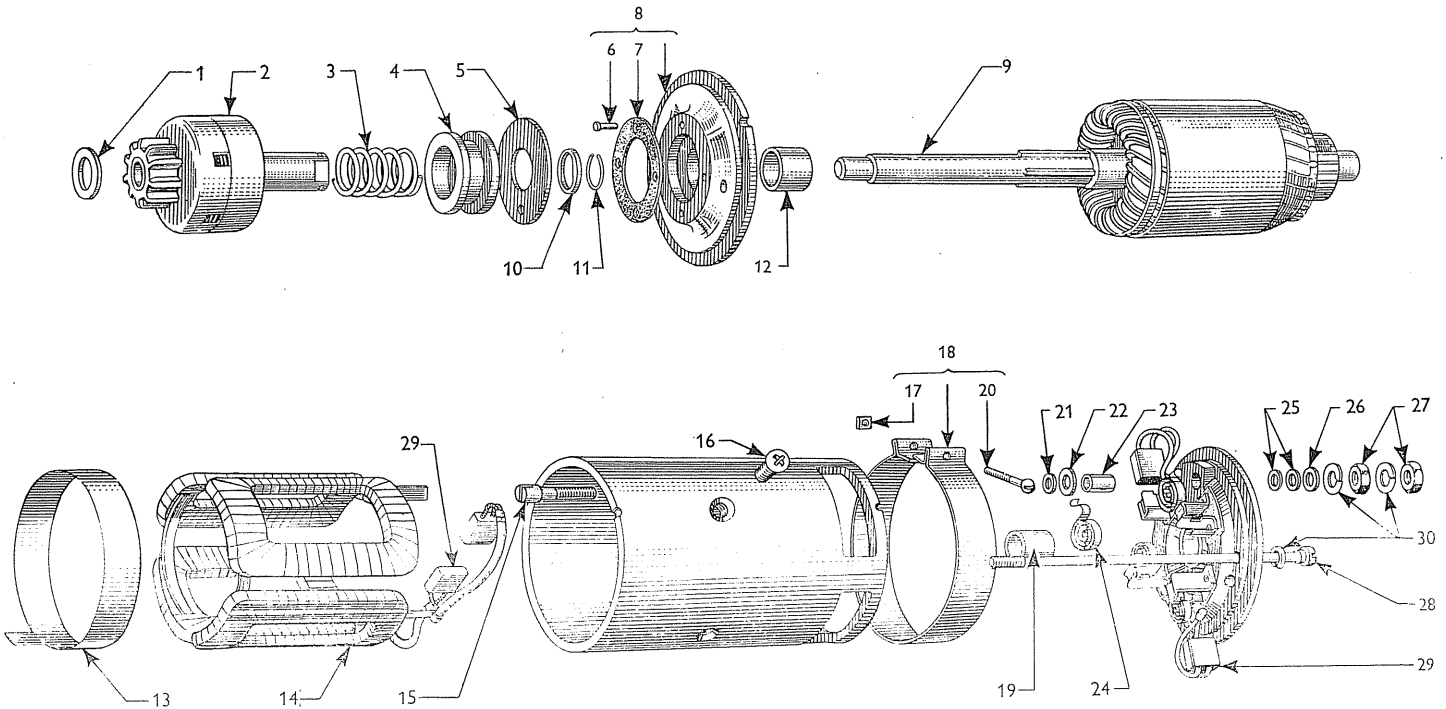
1
2
3
4
5
6
7
8
9
10
11
12
13
14
15
16
17
18
19
20
21
22
23
24
25
26
27
28
29
30

Ref.	Part No.	Description	Ref.	Part No.	Description

STARTER MOTOR—DIESEL

1	118228–ES	...Washer
2	E1ADDN–11350	...Pinion assy.
3	E1ADDN–11375	...Spring
4	E1ADDN–11394	...Bush
5	E1ADDN–11393	...Plate
6	119928–ES	...Rivet
7	E1ADDN–11139	...Lining
8	E1ADDN–11130-B	...Plate assy.
9	E1ADDN–11005-B	...Armature
10	E5–CQ-9	...Clip
11	E4–CQ-9	...Ring
12	E1ADDN–11135-B	...Bush
13	E1ADDN–11089	...Insulator
14	E1ADDN–11081-B	...Coils
15	E27N–11102-A	...Terminal
16	118861–ES	...Screw
17	34141–S	...Nut
18	E1ADDN–11125	...Band
19	E27N–11052	...Bush
20	27161–S	...Screw
21	118140–ES	...Washer
22	119699–ES	...Washer
23	E27N–11107	...Bush
24	E62A–10068	...Spring
25	118140–ES	...Washer
26	44720–S	...Washer
27	E0TA–11108	...Nut
28	E62A–10166	...Bolt
29	E1ADDN–11057	...Brush kit
30	34805–S	...Lockwasher

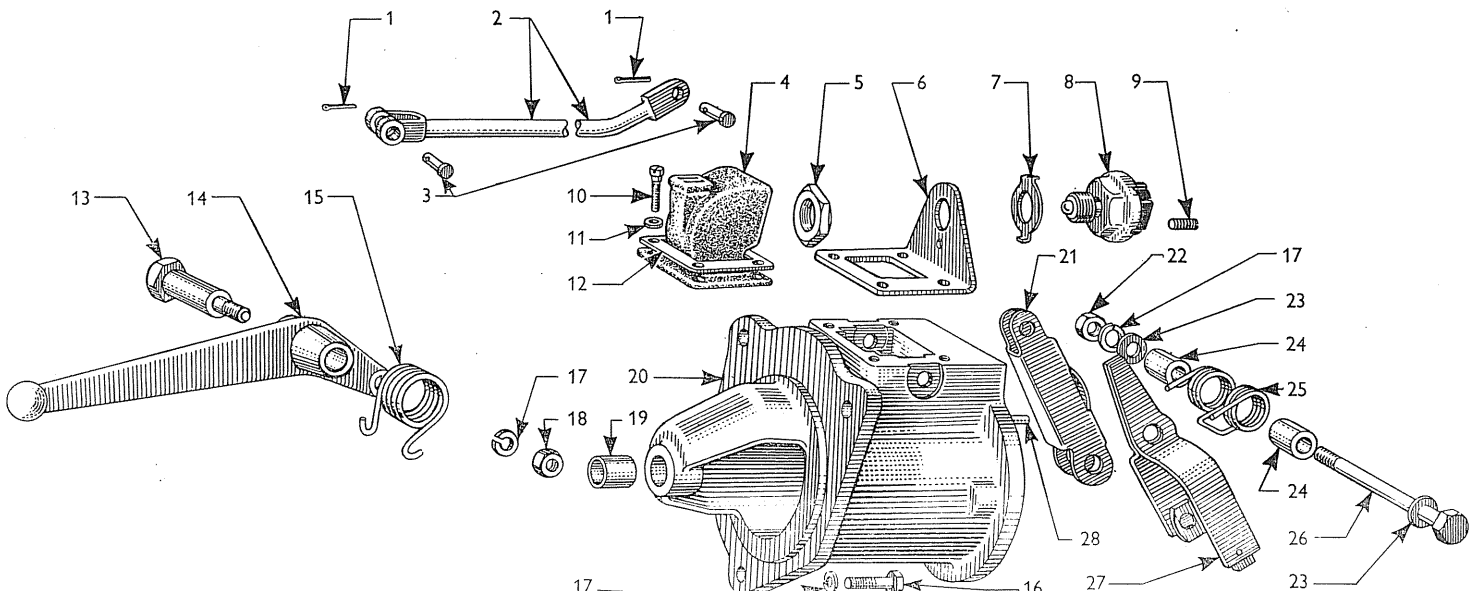
1
2
1
4
5
6
7
8
9
3
10
11
12
13
14
15
21
22
17
23
24
25
17
20
18
19
24
26
28
17
16
27
23

Ref.	Part No.	Description	Ref.	Part No.	Description

STARTER SWITCH AND CONTROL—DIESEL

1	72003–S	...Split pin
2	E16–NE–9	...Rod
3	73877–S7/8	...Clevis pin
4	E1ADDN–11535	...Cover
5	E1ADDN–11530–B	...Nut
6	E1ADDN–11510–B	...Bracket
7	E1ADDN–11532	...Lockwasher
8	E1ADDN–11500	...Switch
9	118656–ES7/8	...Screw
10	118667–ES7	...Screw
11	118150–ES	...Washer
12	E1ADDN–11531	...Plate
13	E1ADDN–11517	...Bolt
14	E1ADDN–11515	...Lever
15	E1ADDN–11526	...Spring
16	20388–S2	...Bolt
17	34807–S2	...Lockwasher
18	33799–S2	...Nut
19	E1ADDN–11395	...Bush
20	E1ADDN–11358	...Housing
21	E1ADDN–11533	...Lever
22	117654–ES	...Nut
23	34747–S	...Washer
24	E1ADDN–11534	...Spacer
25	E1ADDN–11397	...Spring
26	118876–ES	...Bolt
27	E1ADDN–11396	...Lever
28	E1ADDN–10088	...Dowel

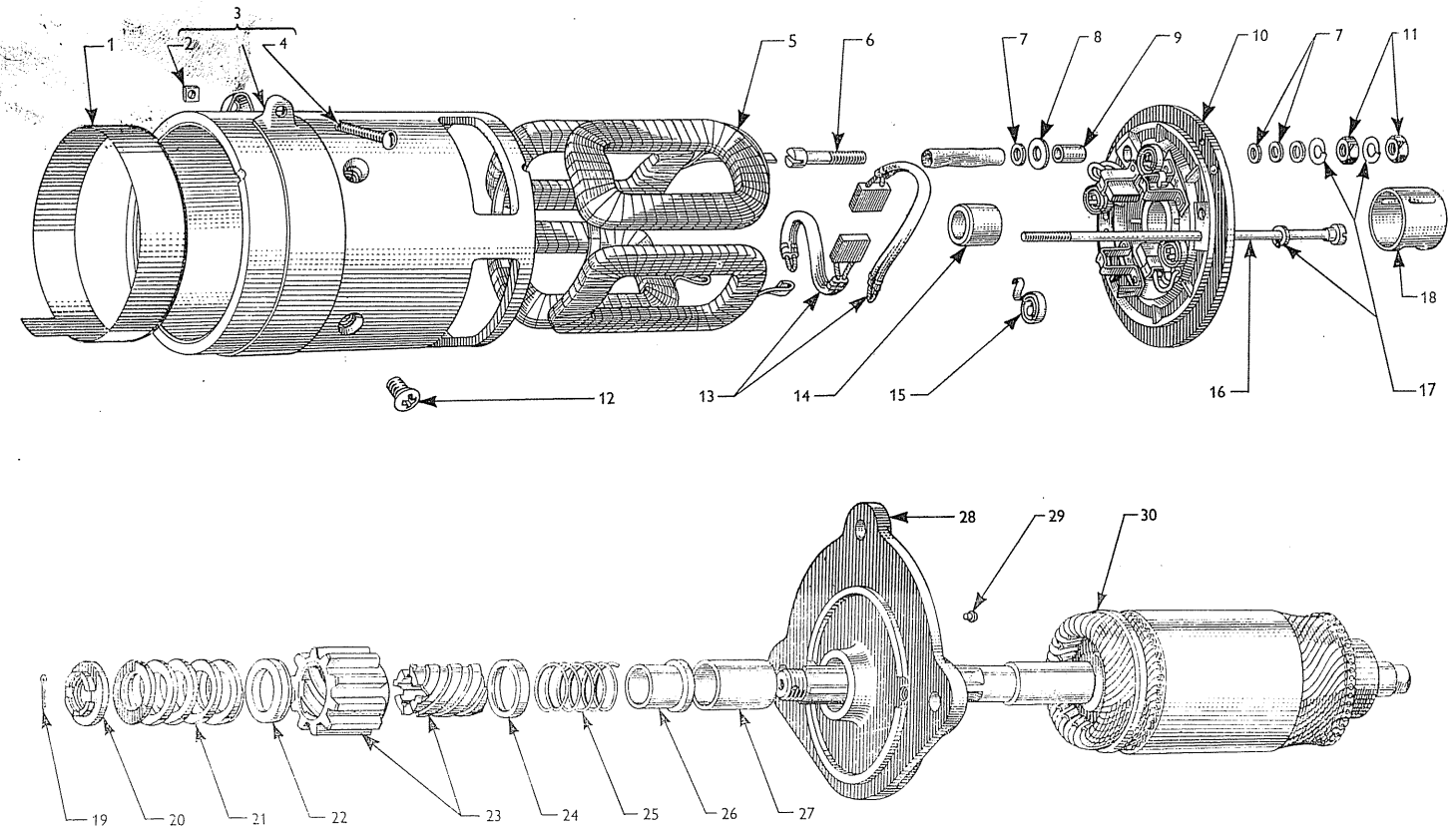
1
2
3
4
5
6
7
8
9
10
7
11
18
12
13
14
15
16
17
28
29
30
19
20
21
22
23
24
25
26
27

Ref.	Part No.	Description	Ref.	Part No.	Description

STARTER MOTOR—PETROL AND VAP. OIL

1	E0TTA–11089	...Insulator
2	34141–S	...Nut
3	E27N–11125	...Band
4	27161–S	...Screw
5	E27N–11081-B	...Coils
6	E27N–11102-A	...Terminal
7	118140–ES	...Washer
8	119699–ES	...Washer
9	E27N–11107	...Bush
10	E27N–11049-B	...Plate
11	E0TA–11108	...Nut
12	118861–ES	...Screw
13	CE–11057	...Brush kit
14	E27N–11052	...Bush
15	EB–11059	...Spring
16	E0TTA–11079	...Bolt
17	34805–S	...Lockwasher
18	E1ADKN–11053	...Cap
19	72052–S	...Split pin
20	E1ADKN–11381	...Nut
21	E1ADKN–11375	...Spring
22	E1ADKN–11386-B	...Washer
23	E1ADKN–11353-B	...Pinion & sleeve
24	E1ADKN–11365	.. Cup
25	E1ADKN–11359	...Spring
26	E1ADKN–11357-B	...Guide
27	E0TTA–11135	...Bush
28	E1ADKN–11130	...Plate
29	7W–10088	...Dowel
30	E1ADKN–11005	...Armature

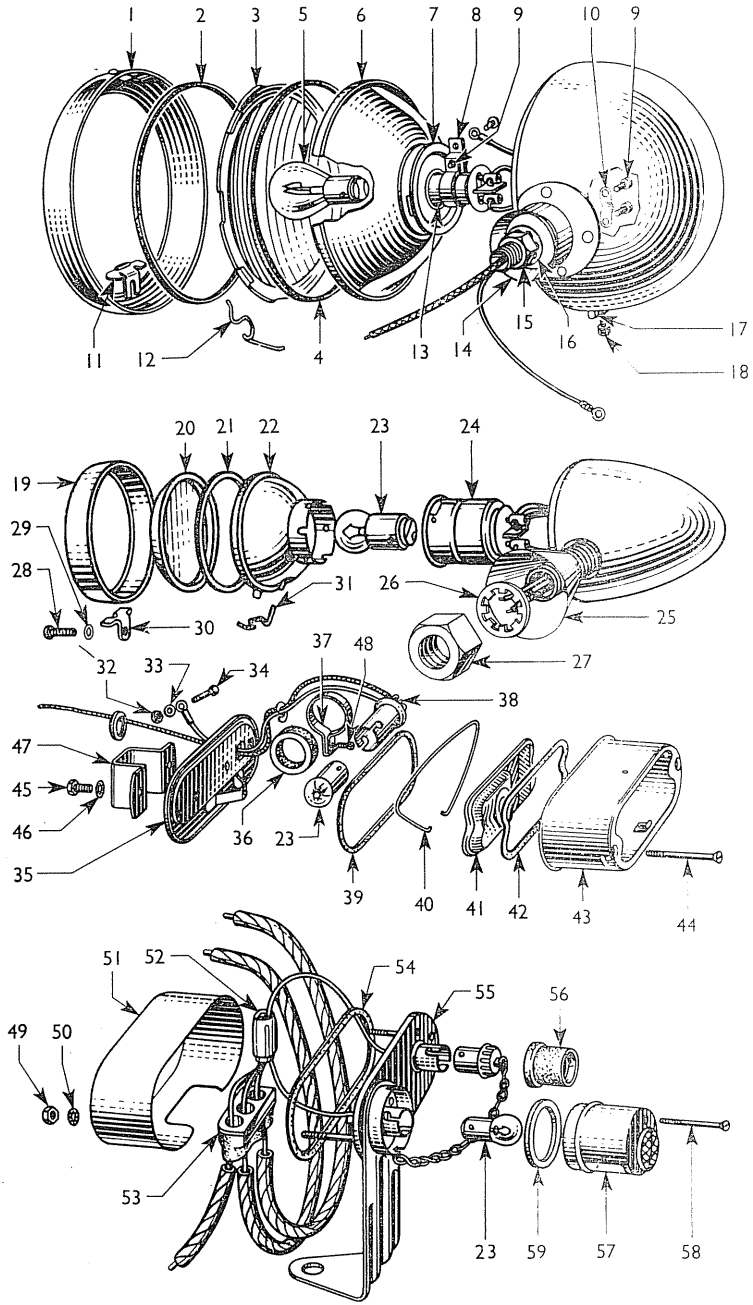
1
2
3
5
6
7
8
9
10
9
11
12
4
13
14
15
16
17
18
20
21
22
23
24
19
29
28
31
26
25
30
32
27
33
34
37
48
38
47
45
46
35
36
23
39
40
41
42
43
44
51
52
54
55
56
49
50
53
23
59
57
58

Ref.	Part No.	Description

LAMPS

Ref.	Part No.	Description
1	E1ADKN-13043	...Door
2	E1ADKN-13068	...Gasket
3	E1ADKN-13060	...Lens
4	E04C-13066	...Gasket
5	E27N-13007	...Bulb
6	E1ADKN-13028	...Reflector
7	E93A-13096	...Adaptor
8	E62A-13085	...Clamp
9	AB-604/6A-S2	...Screw
10	E1ADKN-13089	...Clip
11	E1ADKN-13016	...Catch
12	E1ADKN-13061	...Retainer
13	E62A-13077	...Socket
14	E1ADKN-13132	...Washer
15	33836-ES8B	...Nut
16	34911-S	...Lockwasher
17	E1ADKN-13050	...Nut—swivel
18	E1ADKN-13047	...Bolt
19	E1ADKN-13210	...Door
20	E93AF/A-13208	...Lens
21	E93AF/A-13211	...Gasket
22	E1ADKN-13204	...Reflector
23	E0A-13466-B	...Bulb
24	E1ADKN-13251	...Socket
25	E1ADKN-13223	...Washer
26	34910-S7/8	...Lockwasher
27	33848-ES	...Nut
28	E1ADKN-13226	...Screw
29	E1ADKN-13233	...Retainer
30	E1ADKN-13236	...Latch
31	E1ADKN-13213	...Retainer
32	34079-S7/8	...Nut
33	34903-S7/8	...Lockwasher
34	27129-S7/8	...Bolt
35	E61-NC-9	...Plate R. H.
	E62-NC-9	...Plate L. H.
36	E1ADKN-13256	...Sleeve
37	E63-NC-9	...Clamp
38	E64-NC-9	...Socket
39	7W-13460-A	...Gasket
40	7W-13456	...Retainer
41	E1ADKN-13450	...Lens
42	7W-13461	...Gasket
43	E1ADKN-13448-B	...Body
44	7W-13464	...Screw
45	20301-S2	...Bolt
46	34940-S2	...Lockwasher
47	E1ADKN-13469	...Bracket
48	118673-ES7/8	...Screw
49	AN-102-Z	...Nut
50	34903-S	...Washer
51	E1ADKN-13414	...Cover
52	E1ADKN-14487-B	...Connector
53	E1ADKN-13492	...Grommet
54	7W-13460-A	...Gasket
55	E1ADKN-13408-B	...Bracket assy.
56	E1ADKN-13490	...Sleeve
57	E1ADKN-13448-A	...Body & lens
58	7V-13464	...Screw
59	E1ADKN-13460	...Gasket

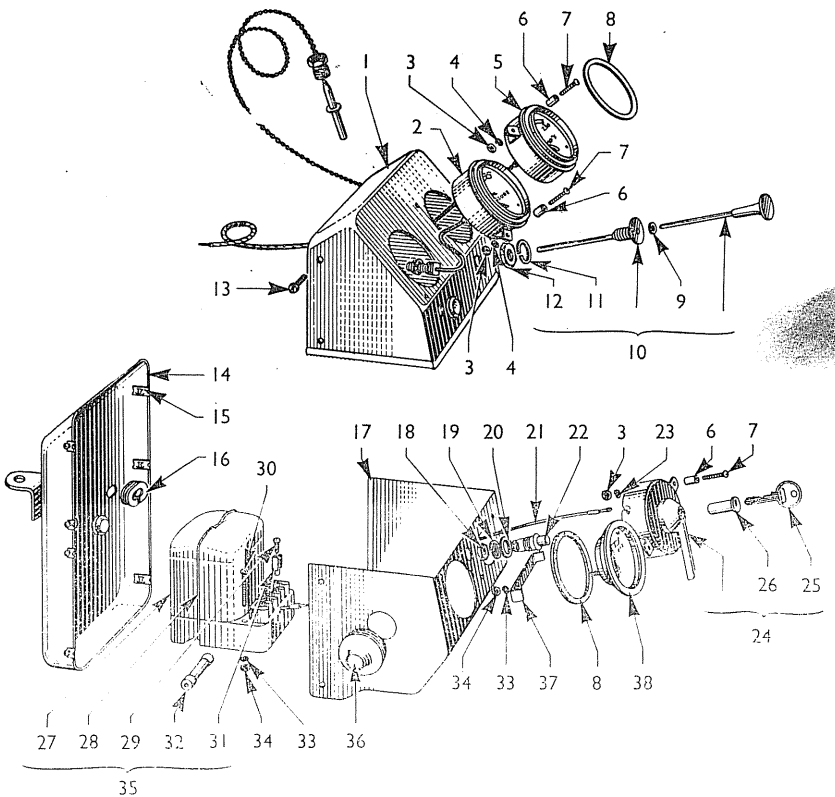
1
2
3
4
5
6
7
8
9
10
11
12
13
14
15
16
17
18
19
20
21
22
23
24
25
26
27
28
29
30
31
32
33
34
35
36
37
38

Ref.	Part No.	Description	Ref.	Part No.	Description

INSTRUMENT BOX

1	E1ADKN–11854-B	...Cover
2	E1ADKN–9273-B	...Gauge
3	34052–S7/8	...Nut
4	34842–S	...Lockwasher
5	E1ADKN–10883-C	...Gauge
6	W0T2–11845	...Spacer
7	26512–S2	...Bolt
8	E1ADKN–10861	...Gasket
9	CE–14612	...Anti-rattle
10	E1ADDN–99785	...Control
11	351452–S7	...Lockwasher
12	351052–S7	...Nut
13	33177–S	...Screw
14	E1ADKN–11850-B	...Box
15	45142–ES	...Nut
16	E1ADKN–10882	...Grommet
17	E1ADKN–11855-A	...Cover
18	E62A–11502	...Nut
19	E62A–11503	...Lockwasher
20	E62A–11504	...Washer
21	E1ADKN–14201	...Wire
22	ET6–11500-B	...Button
23	34938–S	...Lockwasher
24	E1ADKN–11654-A	...Switch (less Mag.)
	E1ADKN–11654-B	...Switch (with Mag.)
25	CE–46122-E	...Key
26	E1ADKN–3686	...Cylinder assy.
27	E93A–10560	...Cover
28	E93A–10624	...Bail
29	118767–ES	...Screw
30	27153–S7/8	...Screw
31	E93A–10578	...Terminal
32	E27N–10570-B	...Resistance
33	34803–S2	...Lockwasher
34	34079–S2	...Nut
35	E27N–10505-E	...Regulator assy.
36	7V–14603-A	...Grommet
37	8N–10879	...Clamp
38	E1ADKN–10850	...Ammeter

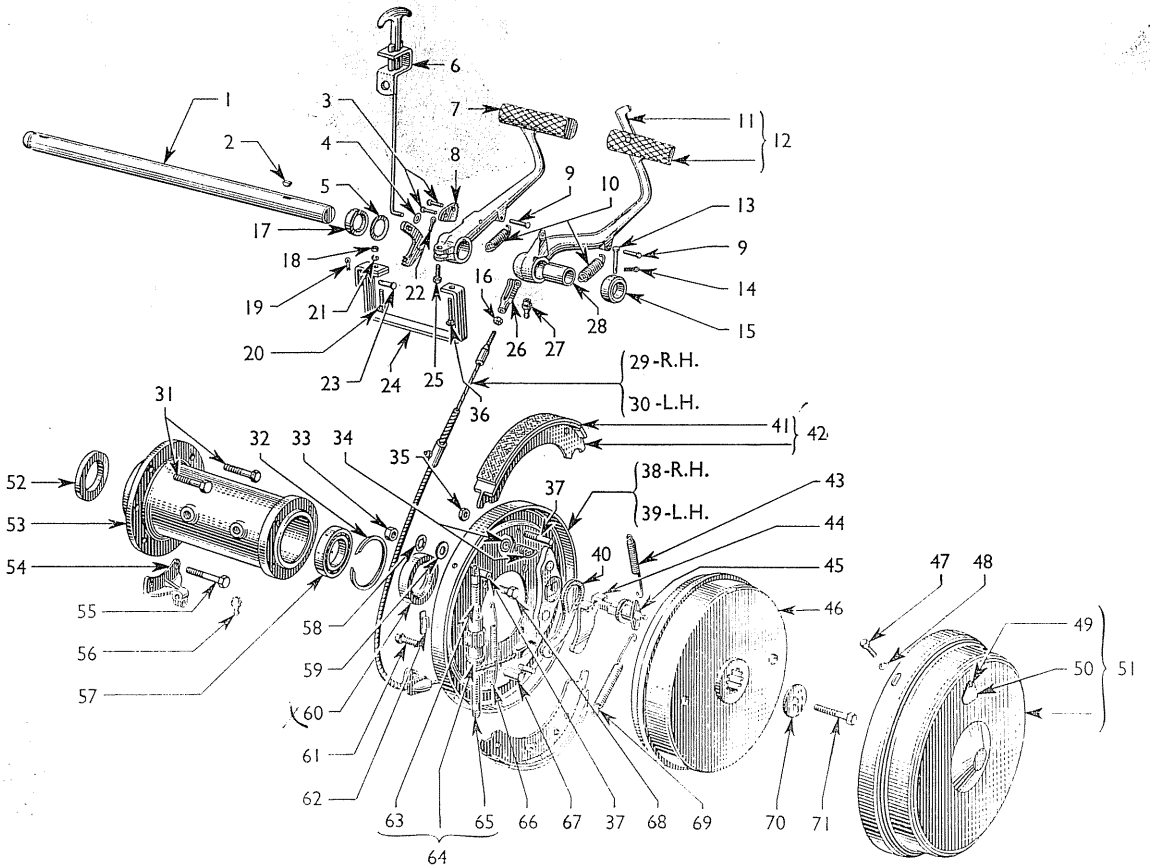
1
2
3
4
5
6
7
8
9
10
11
12
13
14
15
16
17
18
19
20
21
22
23
24
25
26
27
28
29-R.H.
30-L.H.
31
32
33
34
35
36
37
38-R.H.
39-L.H.
40
41
42
43
44
45
46
47
48
49
50
51
52
53
54
55
56
57
58
59
60
61
62
63
64
65
66
67
37
68
69
70
71

STEERING BRAKES

Ref.	Part No.	Description
1	E1ADKN–7506-A	...Shaft
2	74151–S	...Key
3	62409–S	...Rivet
4	44734–S7/8	...Washer
5	E27N–7508	...Washer
6	E2–FC-9	...Control
7	E1ADKN–2443-B	...Pedal
8	E1ADKN–2548-B	...Sector
9	E1ADKN–7514	...Pin
10	E1ADKN–2456	...Spring
11	E1ADKN–2440	...Latch
12	E1ADKN–2448-B	...Pedal
13	74006–S7	...Pin
14	72005–S	...Split pin
15	E27N–7507	...Collar
16	34083–S	...Nut
17	E27N–2867-A	...Seal
18	33798–S	...Nut
19	72008–S	...Split pin
20	355471–S2	...Bolt
21	34806–S	...Lockwasher
22	72017–S	...Split pin
23	73921–S7	...Clevis pin
24	E1ADKN–2521-B	...Bracket
25	20471–S	...Bolt
X 26	97013–S	...Clevis 1
27	353026–S7/8	...Lubricator
28	7V–3109	...Bush
X29	E1ADKN–2498	...Cable R. H. 1
X30	E1ADKN–2499	...Cable L. H. 1
31	118904–ES	...Screw
32	ET6–7030	...Ring
33	33850–S2	...Nut
34	E27N–2284-B	...Cup assy.
35	FN–105-K-S7	...Nut
36	350483–S2	...Bolt
37	E27N–2025	...Post
38	E1ADKN–2213	...Plate R. H.
39	E1ADKN–2214	...Plate L. H.
40	E27N–2057-B	...Lever
41	E27N–2021-B	...Lining
X42	E1ADKN–2019	...Shoe assy. 4
43	E27N–2035-A	...Spring
44	E27N–2058-B	...Lever R. H.
	E27N–2059-B	...Lever L. H.
45	E27N–2067-B	...Pin
X46	E1ADKN–2767	...Drum 2
47	20310–S2	...Screw
48	34806–S	...Lockwasher
49	60018–S	...Rivet
50	E27N–2766-B	...Plate
51	E27N–2774-B	...Cover
52	E1ADKN–2773-A	...Seal
53	E1ADKN–2219	...Housing
54	E1ADKN–2512	...Support R. H.
	E1ADKN–2513	...Support L. H.
55	118905–ES	...Screw
56	353026–S7/8	...Lubricator
57	BB–7025	...Bearing
58	34924–ES	...Lockwasher
59	E1ADKN–2114	...Washer
60	E1ADKN–2217-A	...Seal
X61	118810–ES	...Screw 4
62	E1ADKN–2238	...Cover
63	E1ADKN–2042	...Screw R. H.
64	E1ADKN–2040	...Pinion assy.
65	E1ADKN–2048	...Screw L. H.
66	E27N–2034	...Spring
67	E27N–2068	...Stop
68	350522–ESA	...Screw
69	E27N–2036	...Spring
70	118280–ES	...Washer
71	45747–S	...Screw

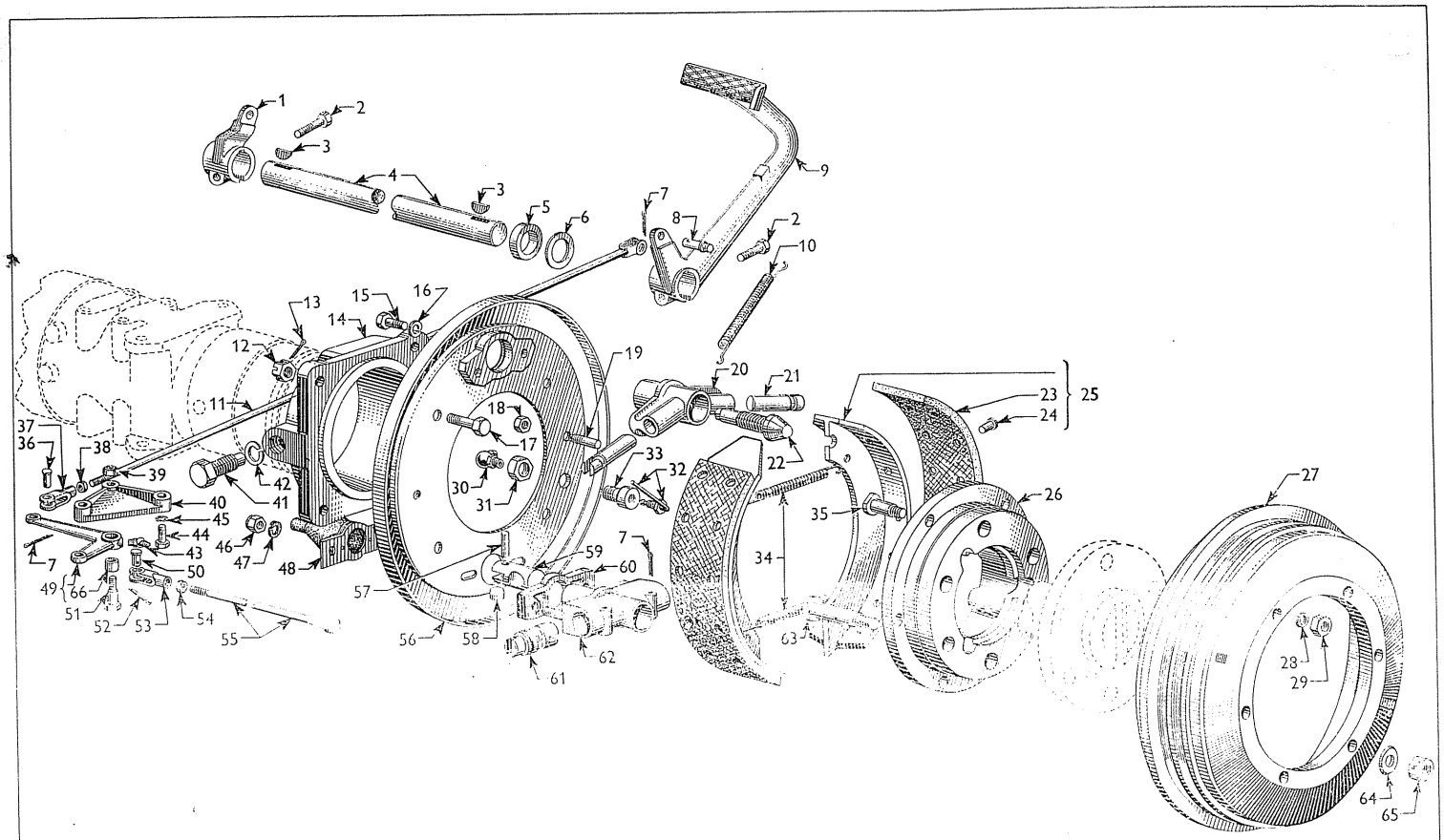
1
2
3
4
3
5
6
7
8
2
9
10
11
12
13
14
15
16
17
18
19
20
21
22
23
24
25
26
27
28
29
30
31
32
33
34
35
36
37
38
39
40
41
42
43
44
45
46
47
48
49
50
51
52
53
54
55
56
57
58
59
60
61
62
63
64
65
66
7
7

Ref.	Part No.	Description
1	E1ADKN-2514-B	...Lever
2	20471-S2	...Bolt
3	74151-S	...Key
4	E1ADKN-7506-B	...Shaft
5	E27N-2867-A	...Seal
6	E27N-7508	...Washer
7	72017-S	...Split pin
8	EB-7533	...Clevis pin
9	E1ADKN-2455-B	...Pedal
10	BB-7523	...Spring
11	E27N-2500	...Rod
12	34034-S	...Nut
13	72062-S	...Split pin
14	E27N-2293	...Adaptor
15	FB-106/9-B	...Bolt
16	34847-S	...Lockwasher
17	119183-ES	...Bolt
18	33800-ES7/8	...Nut
19	E27N-2074	...Post
20	E27N-2049	...Housing
21	E27N-2063	...Plunger L. H.
	E27N-2062	...Plunger R. H.
22	7V-2041-B	...Cone
23	E27N-2021-C	...Lining
24	119453-ES	...Rivet
25	E27N-2019-C	...Shoe assy.
26	E27N-1173	...Adaptor
27	E27N-1126	...Drum
28	34809-S	...Lockwasher
29	33846-S	...Nut
30	353031-S7	...Lubricator
31	33947-S	...Nut
32	E27N-4100	...Tube
33	E27N-4101	...Plug
34	E27N-2035-B	...Spring
35	E27N-1191	...Bolt
36	73911-S	...Clevis pin
37	97012-ES2B	...Clevis
38	33923-S	...Nut
39	33943-S	...Nut
40	E1ADKN-2540	...Bracket R. H.
	E1ADKN-2538	...Bracket L. H.
41	N-21330-C	...Screw
42	34814-S	...Lockwasher
43	353027-S	...Lubricator
44	FWB-110/20-D	...Screw
45	34811-S	...Lockwasher
46	119580-ES	...Nut
47	119691-ES	...Lockwasher
48	E27N-2203	...Cover assy.
49	E1ADKN-2560	...Lever assy.
50	73919-S	...Clevis pin
51	E27N-2563	...Pivot
52	72026-S	...Split pin
53	97013-S	...Clevis
54	33800-ES	...Nut
55	E27N-2289	...Link
56	E27N-2215-B	...Plate
57	E27N-2055	...Pin
58	E27N-2023	...Roller
59	E8-FB-9	...Plunger
60	E27N-2278	...Piece
61	E1ADKN-2280	...Plunger
62	E27N-2219	...Housing assy.
63	E27N-1118	...Bolt
64	BBE-1150	...Washer
65	BBE-1120	...Nut
66	7W-2480	...Bush

REAR WHEEL BRAKES

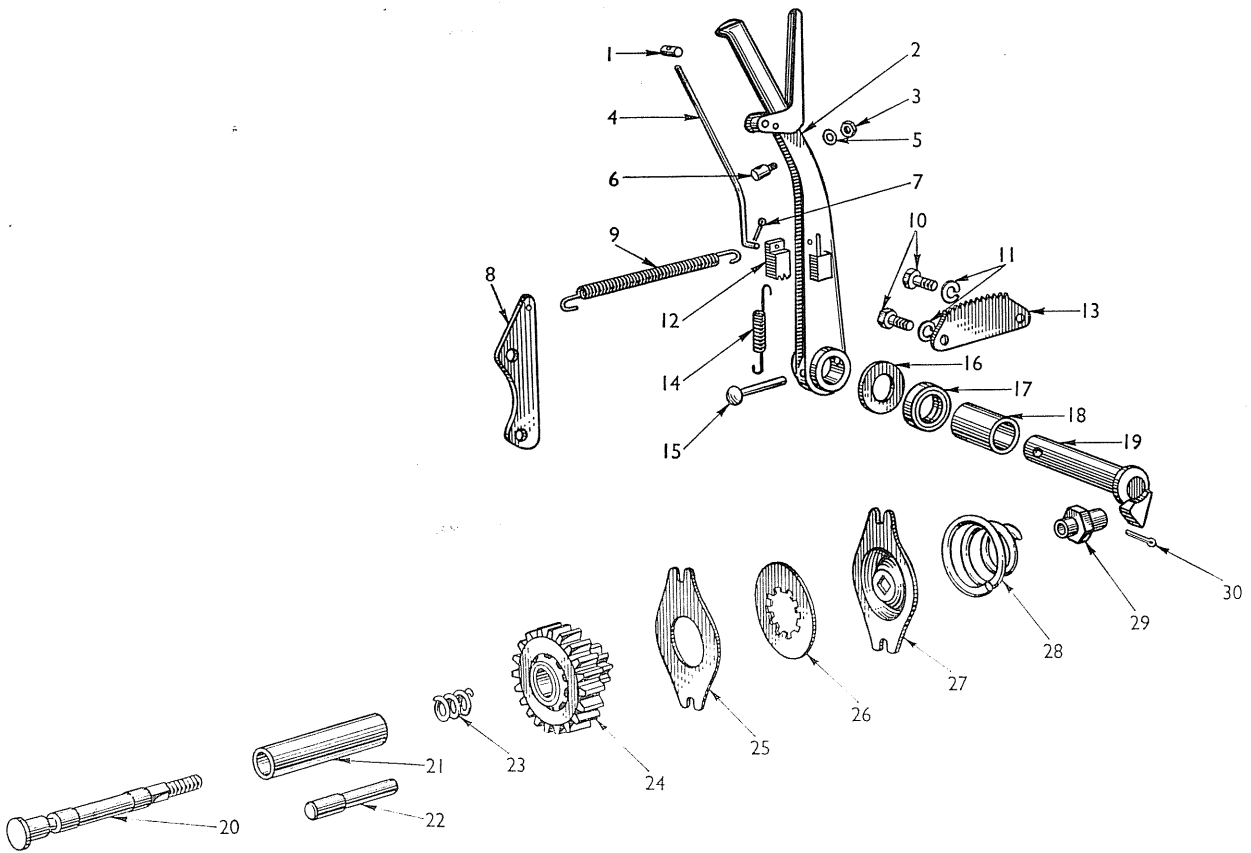
1
2
3
4
5
6
7
8
9
10
11
12
13
14
15
16
17
18
19
20
21
22
23
24
25
26
27
28
29
30

Ref.	Part No.	Description	Ref.	Part No.	Description

TRANSMISSION HAND BRAKE

1	E1ADKN–2787	...Nipple
2	E1ADKN–2780	...Lever
3	34079–S2	...Nut
4	E1ADKN–2785	...Rod
5	44712–S2	...Washer
6	BBE–2817	...Retainer
7	72000–S	...Split pin
8	E48–FD-9	...Bracket
9	E83W–13515	...Spring
10	20412–S	...Bolt
11	34809–S	...Lockwasher
12	E27N–2786-B	...Pawl
13	E27N–2795	...Sector
14	YE–2793	...Spring
15	61637–S	...Rivet
16	24766–S	...Washer
17	E27N–2867-A	...Seal
18	7V–3109	...Bush
19	E27N–2714	...Cam
20	E27N–7702	...Shaft
21	E1ADKN–7140	...Shaft
22	N–7706-C	...Pin
23	N–115095-A	...Spring
24	N–7141-E	...Gear
25	N–7705-B	...Plate
26	N–7704-B	...Plate
27	N–7703-C	...Hub
28	N–7707-B	...Spring
29	N–7708-B	...Nut
30	72053–S	...Split pin

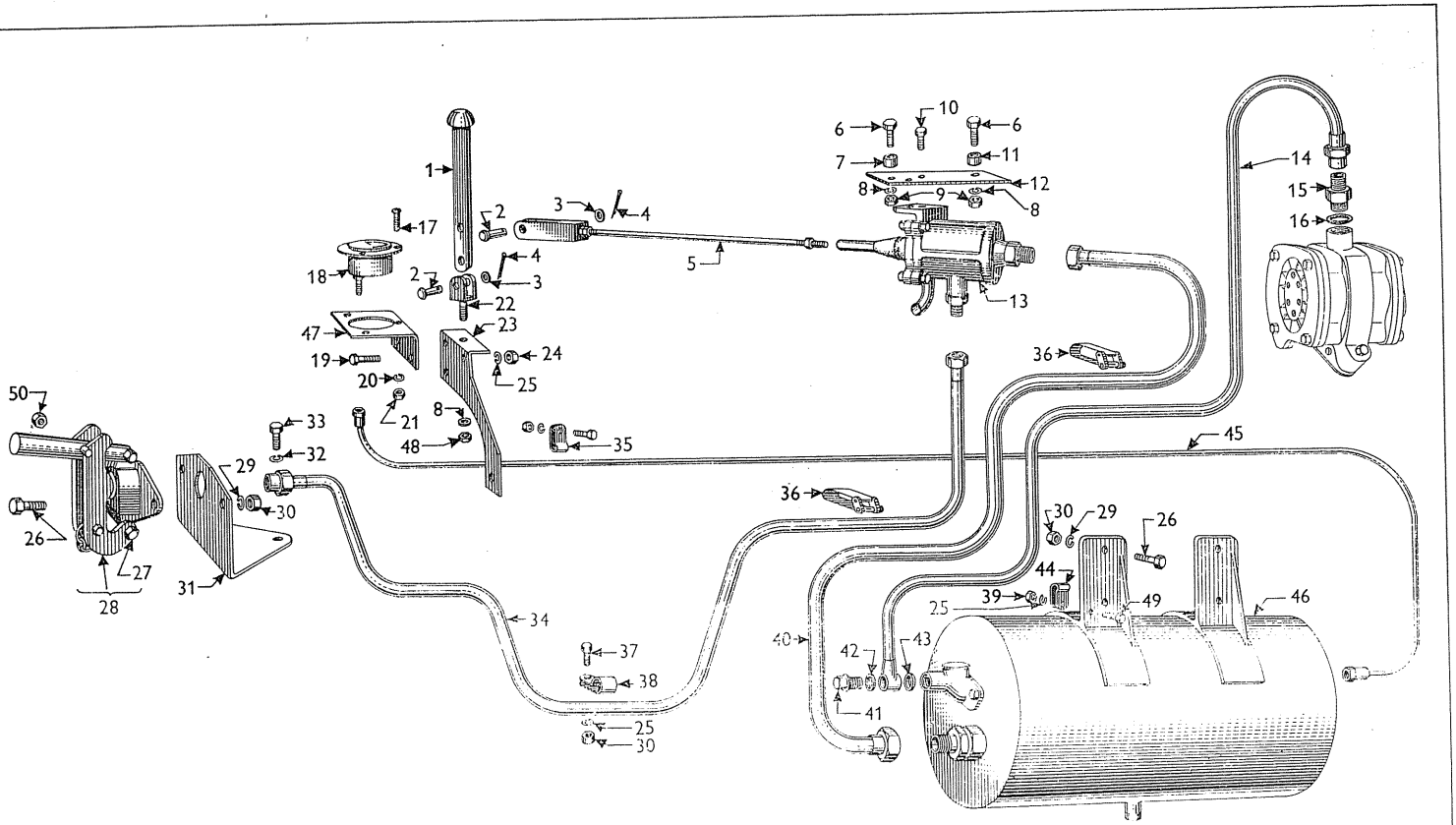
1
2
3
4
5
6
7
8
9
10
11
12
13
14
15
16
17
18
19
20
21
22
23
24
25
26
27
28
29
30
31
32
33
34
35
36
37
38
39
40
41
42
43
44
45
46
47
48
49
50

Ref.	Part No.	Description	Ref.	Part No.	Description

VACUUM BRAKING EQUIPMENT

1	E91–FG-9	...Lever
2	73918–S	...Clevis pin
3	FW–105-A	...Washer
4	72033–S	...Split pin
5	E20–FG-9	...Rod assy.
6	20447–S	...Bolt
7	E35–FG-9	...Collar
8	34806–S	...Lockwasher
9	33798–S	...Nut
10	22613–ES	...Bolt
11	E72–FG-9	...Collar
12	E27–FG-9	...Bracket
13	E19–FG-9	...Valve assy.
14	E30–FG-9	...Pipe
15	E61–FG-9	...Adaptor
16	118302–ES	...Washer
17	118662–ES7/8	...Bolt
18	E23–FG-9	...Gauge
19	20309–S2	...Bolt
20	34823–S2	...Lockwasher
21	117515–ES	...Nut
22	E38–FG-9	...Fork
23	E37–FG-9	...Bracket
24	33796–S	...Nut
25	34805–S	...Lockwasher
26	20413–S	...Bolt
27	E63–FG-9	...Pin
28	E26–FG-9	...Coupling assy.
29	34809–S	...Lockwasher
30	33832–S	...Nut
31	E25–FG-9	...Bracket
32	34811–S	...Lockwasher
33	20938–S	...Bolt
34	E28–FG-9	...Pipe
35	E494A–8143	...Clip
36	E34–FG-9	...Clip
37	20325–S2	...Bolt
38	7V–14593	...Clip
39	33782–S	...Nut
40	E29–FG-9	...Pipe
41	ET6–2428	...Fastener
42	40–12410	...Washer
43	E33–FG-9	...Washer
44	E36–FG-9	...Clip
45	E31–FG-9	...Pipe
46	E18–FG-9	...Reservoir
47	E24–FG-9	...Bracket
48	33798–ES	...Nut
49	20345–S	...Bolt
50	117597–ES	...Nut

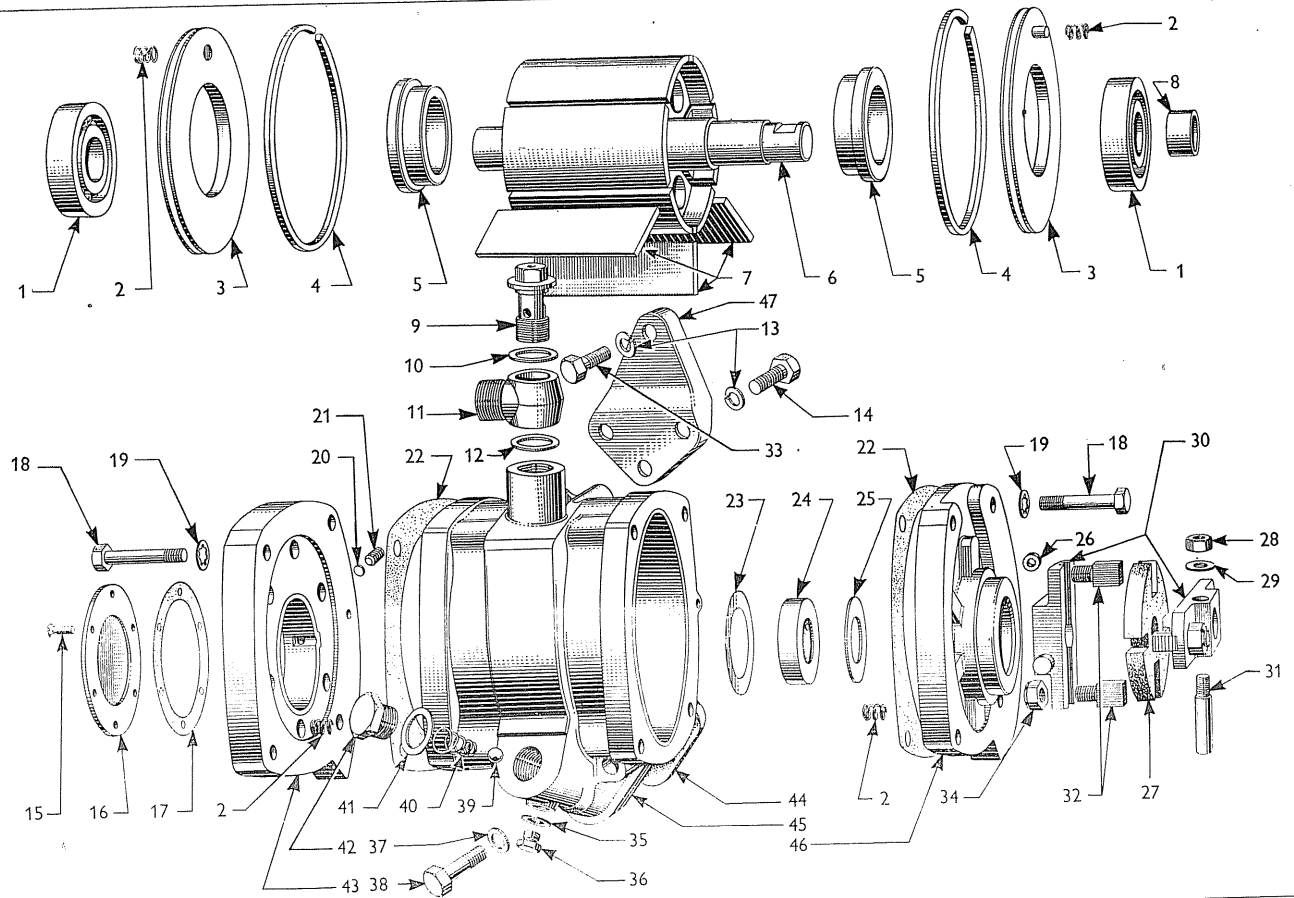
1
2
3
4
5
6
7
8
9
10
11
12
13
14
15
16
17
18
19
20
21
22
23
24
25
26
27
28
29
30
31
32
33
34
35
36
37
38
39
40
41
42
43
44
45
46
47

Ref.	Part No.	Description

EXHAUSTER

Ref.	Part No.	Description
1	E43–FG–5	...Bearing
2	E57–FG–5	...Spring
3	E48–FG–5	...Plate
4	E56–FG–5	...Ring
5	E42–FG–5	...Ring
6	E40–FG–5	...Rotor
7	E44–FG–5	...Blades
8	E41–FG–5	...Collar
9	E16–FG–5	...Bolt
10	118344–ES	...Washer
11	E17–FG–5	...Banjo
12	118302–ES	...Washer
13	34826–ES2	...Lockwasher
14	20310–S	...Bolt
15	118703–ES	...Screw
16	E49–FG–5	...Plate
17	E50–FG–5	...Gasket
18	118894–ES	...Bolt
19	118278–ES	...Lockwasher
20	E70–FG–5	...Disc
21	E69–FG–5	...Plug
22	E47–FG–5	...Gasket
23	E52–FG–5	...Plate
24	E58–FG–5	...Seal
25	E51–FG–5	...Plate
26	E8–FG–5	...Seal
27	E1ADDN–993184	...Pad
28	33798–S2	...Nut
29	44722–S	...Washer
30	E12–FG–5	...Flange
31	E13–FG–5	...Pin
32	E11–FG–5	...Dog
33	20327–S2	...Bolt
34	34420–ES	...Nut
35	118198–ES	...Washer
36	E59–FG–5	...Plug
37	E3–CH–9	...Washer
38	21587–ES	...Bolt
39	E55–FG–5	...Ball
40	E54–FG–5	...Spring
41	118197–ES	...Washer
42	E53–FG–5	...Plug
43	E75–FG–5	...Cover
44	E6–FG–5	...Gasket
45	E76–FG–5	...Body
46	E74–FG–5	...Cover
47	E7–FG–5	...Bracket

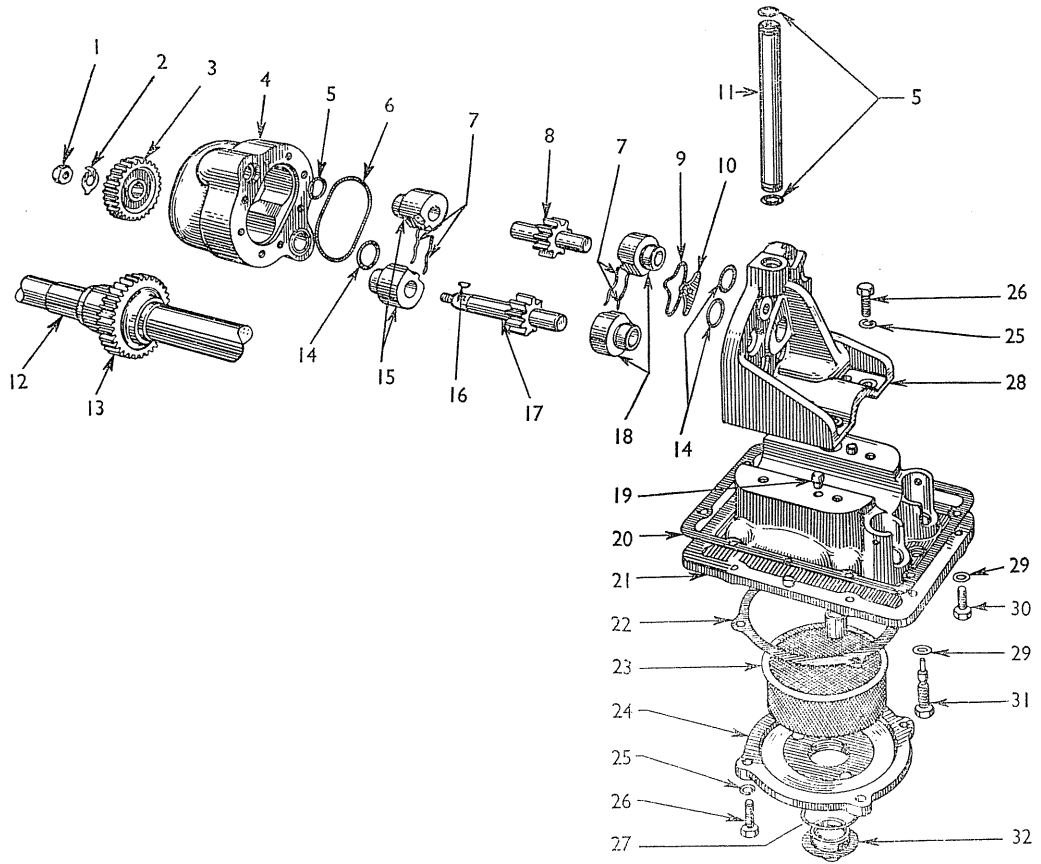
1
2
3
4
5
6
7
8
9
10
11
12
13
14
15
16
17
18
19
20
21
22
23
24
25
26
27
28
29
30
31
32

Ref.	Part No.	Description	Ref.	Part No.	Description

H. P. L. PUMP AND PEDESTAL

1	FN–208-K	...Locknut
2	E1ADKN–994633	...Washer
3	E1ADKN–994688	...Gear
4	E1ADKN–994676	...Body
5	E1ADKN–994694	...Seal
6	E1ADKN–994681	...Seal
7	E1ADKN–994723	...Spring
8	E1ADKN–994684	...Gear
9	E1ADKN–994658	...Seal
10	E1ADKN–994699-A	...Plate ·1125/·1130″
	E1ADKN–994699-B	...Plate ·1150/·1155″
	E1ADKN–994699-C	...Plate ·1175/·1180″
	E1ADKN–994699-D	...Plate ·1200/·1205″
11	E1ADKN–994585	...Pipe
12	E1ADKN–7260	...Shaft
13	E1ADKN–994649	...Gear
14	E1ADKN–994659	...Seal
15	E1ADKN–994667	...Bearing
16	74147–ES	...Key
17	E1ADKN–994683	...Gear
18	E1ADKN–994668	...Bearing
19	E1ADKN–7021	...Dowel
20	E1ADKN–994661	...Gasket
21	E1ADKN–994685	...Pedestal
22	E1ADKN–994687	...Gasket
23	E1ADKN–995017	...Filter
24	E1ADKN–994686	...Cover
25	34808–S2	...Lockwasher
26	20430–ES	...Screw
27	E27N–7011-A	...Gasket
28	E1ADKN–994670	...Bracket
29	E1ADKN–994567	...Seal
30	20450–S2	...Screw
31	E1ADKN–995016	...Filter
32	E27N–7010-A	...Plug

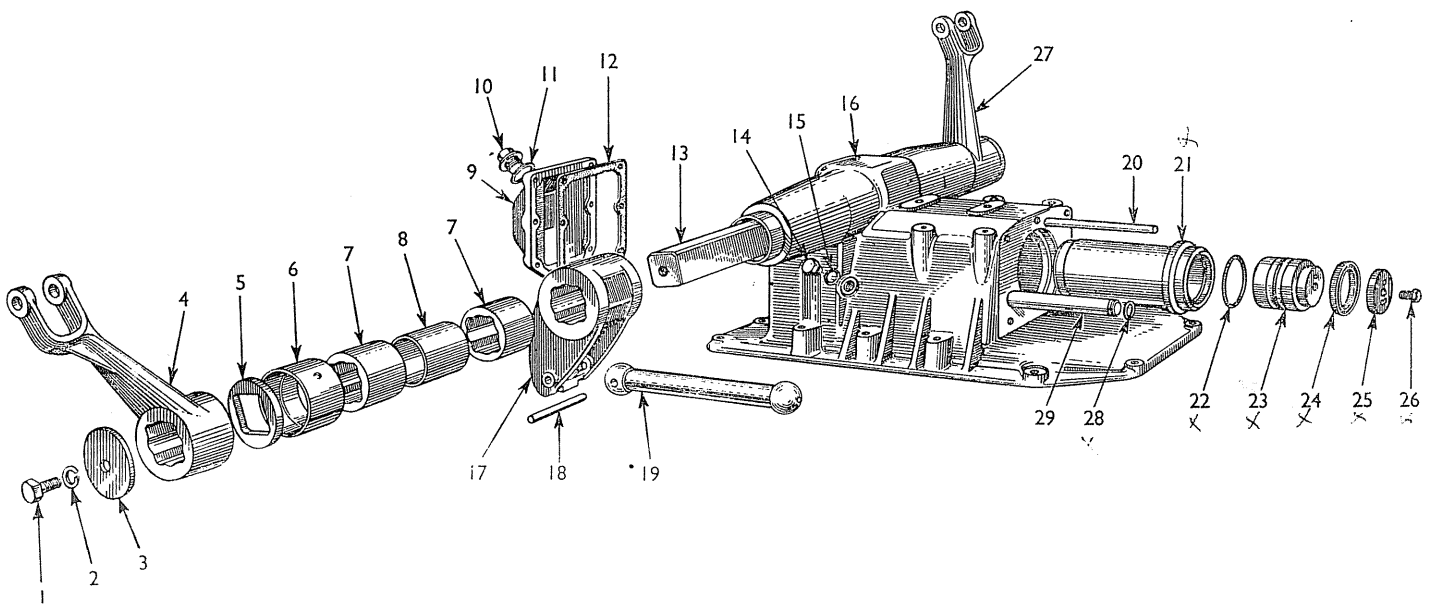
1
2
3
4
5
6
7
7
8
9
10
11
12
13
14
15
16
17
18
19
20
21
22
23
24
25
26
27
28
29

Ref.	Part No.	Description	Ref.	Part No.	Description

H. P. L. RAM CYLINDER AND HOUSING

1	20353–S	...Screw
2	34809–S	...Lockwasher
3	E1ADKN–994607	...Washer
4	E1ADKN–994620	...Arm R. H.
5	E1ADKN–994925	...Seal
6	E1ADKN–994755	...Bush
7	E1ADKN–994777	...Bearing
8	E1ADKN–994791	...Spacer
9	E1ADKN–994783	...Cover
10	E27N–7010–C	...Plug
11	E27N–7011–B	...Gasket
12	E1ADKN–994784	...Gasket
13	E1ADKN–994774	...Shaft
14	E1ADKN–994762–B	...Plug
15	E1ADKN–994573	...Seal
16	E1ADKN–994781	...Housing
17	E1ADKN–994771	...Arm
18	E1ADKN–994770	...Pin
19	E1ADKN–994769–A	...Rod
20	E1ADKN–994827	...Pipe
21	E1ADKN–994758	...Cylinder
22	E1ADKN–994760	...Gland
23	E1ADKN–994692	...Piston
24	E27N–994693–B	...Gland
25	E27N–994695–B	...Retainer
26	WB–105/3–A	...Screw
27	E1ADKN–994621	...Arm L. H.
28	E1ADKN–994694	...Seal
29	E1ADKN–994583	...Pipe

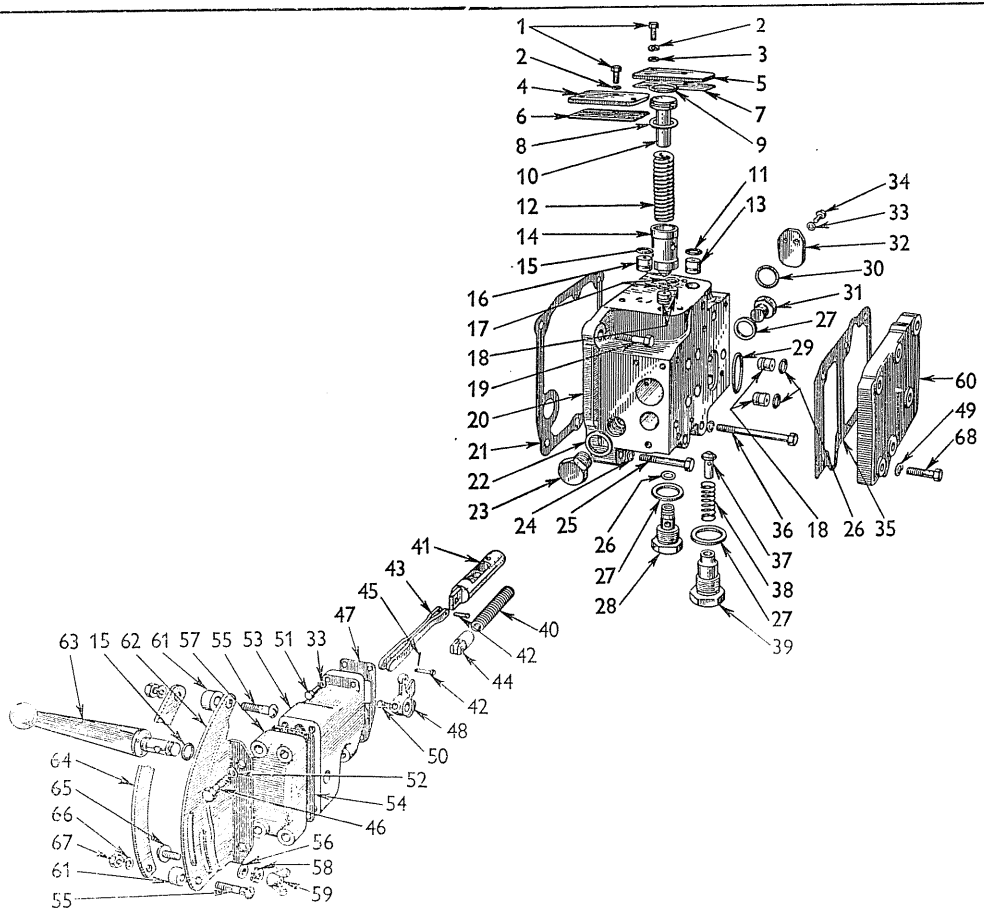
1
2
3
4
5
6
7
8
9
10
11
12
13
14
15
16
17
18
19
20
21
22
23
24
25
26
27
28
29
30
31
32
33
34
35
36
37
38
39
40
41
42
43
44
45
46
47
48
49
50
51
52
53
54
55
56
57
58
59
60
61
62
63
64
65
66
67
68

Ref.	Part No.	Description

H. P. L. VALVE GEAR

Ref.	Part No.	Description
1	20326–S	...Screw
2	34806–S	...Lockwasher
3	118171–ES	...Washer
4	E1ADKN–994623	...Cover
5	E1ADKN–994615	...Cover
6	E1ADKN–994889	...Gasket
7	E1ADKN–994795	...Gasket
8	E1ADKN–994613-A	...Shim ·016″
	E1ADKN–994613-B	...Shim ·028″
9	E1ADKN–994588	...Seal
10	E1ADKN–994616	...Adjuster
11	E1ADKN–994832	...Seal
12	E1ADKN–994717	...Spring
13	E1ADKN–994626	...Retainer
14	E1ADKN–994601	...Valve
15	E1ADKN–994624	...Seal
16	E1ADKN–994992-B	...Retainer
17	E1ADKN–994602	...Seal
18	E1ADKN–994612	...Retainer
19	20490–S2	...Screw
20	E1ADKN–994552-A	...Body assy.
21	E1ADKN–994586	...Gasket
22	E1ADKN–994570	...Seal
23	E1ADKN–994751	...Plug
24	34808–S2	...Lockwasher
25	20536–S2	...Screw
26	E1ADKN–994602	...Seal
27	E1ADKN–994573	...Seal
28	E1ADKN–994608	...Seat
29	E1ADKN–994709	...Seal
30	E1ADKN–994572	...Seal
31	E1ADKN–994762-B	...Plug
32	E1ADKN–994743	...Cover
33	34806–S	...Lockwasher
34	20326–S2	...Screw
35	E1ADKN–994796	...Gasket
36	118906–ES	...Screw
37	E1ADKN–994873	...Valve
38	E1ADKN–994875	...Spring
39	E1ADKN–994874	...Guide
40	E1ADKN–994713	...Spring
41	E1ADKN–994742-A	...Piston std.
	E1ADKN–994742-B	...Piston ·0002″ o/s.
	E1ADKN–994742-C	...Piston ·0004″ o/s.
	E1ADKN–994742-D	...Piston ·0006″ o/s.
	E1ADKN–994742-E	...Piston ·0008″ o/s.
42	73859–S	...Clevis pin
43	E1ADKN–994752	...Link
44	E1ADKN–994720	...Housing
45	72000–S	...Split pin
46	20504–S2	...Screw
47	E1ADKN–994732	...Gasket
48	E1ADKN–994748	...Lever
49	34807–S	...Lockwasher
50	BB–7245	...Screw
51	20386–S2	...Screw
52	34806–S	...Lockwasher
53	E1ADKN–994730	...Housing
54	E1ADKN–994614	...Gasket
55	27132–S	...Screw
56	44722–S	...Washer
57	E1ADKN–994731-A	...Cover
58	119290–ES2	...Lockwasher
59	33896–S2	...Wing nut
60	E1ADKN–994794	...Cover
61	E1ADKN–994660	...Spacer
62	E1ADKN–994808	...Quadrant
63	E1ADKN–994809-B	...Lever assy.
64	E1ADKN–994737	...Guard
65	E1ADKN–994744	...Stop
66	34806–S	...Lockwasher
67	33798–S	...Nut
68	20468–S2	...Screw

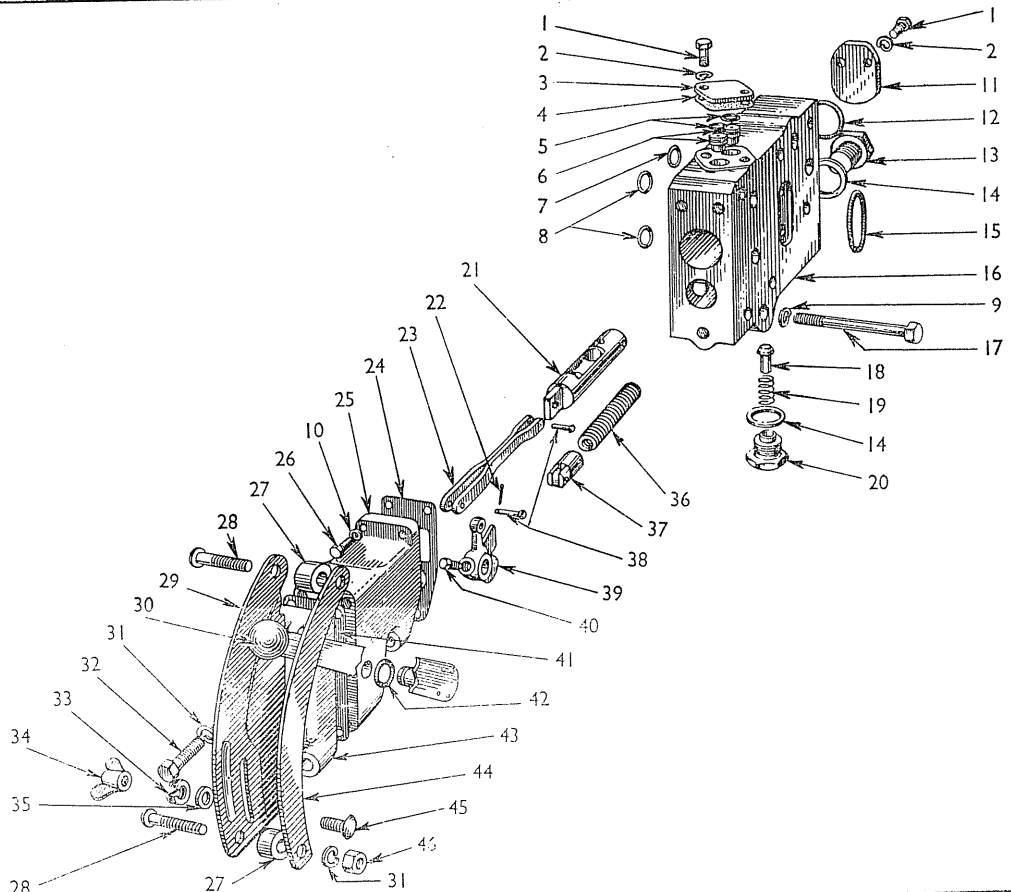
1
2
3
4
5
6
7
8
1
2
11
12
13
14
15
16
9
17
18
19
14
20
21
22
23
24
25
10
26
27
28
29
30
31
32
33
34
35
28
27
31
36
37
38
39
40
41
42
43
44
45
43

Ref.	Part No.	Description	Ref.	Part No.	Description

H. P. L. AUXILIARY VALVE GEAR

1	20326–S2	...Screw
2	34806–S	...Lockwasher
3	E1ADKN–994888	...Cover
4	E1ADKN–994883	...Gasket
5	E1ADKN–994602	...Seal
6	E1ADKN–994612	...Retainer
7	E1ADKN–994663	...Seal
8	E1ADKN–994704	...Seal
9	34807–S	...Lockwasher
10	34806–S	...Lockwasher
11	E1ADKN–994743	...Cover
12	E1ADKN–994572	...Seal
13	E1ADKN–994762-B	...Plug
14	E1ADKN–994573	...Seal
15	E1ADKN–994709	...Seal
16	E1ADKN–994562-A	...Body assy.
17	350568–ES2	...Bolt
18	E1ADKN–994873	...Valve
19	E1ADKN–994875	...Spring
20	E1ADKN–994878	...Guide
21	E1ADKN–994742-A	...Piston std.
	E1ADKN–994742-B	...Piston ·0002″ o/s.
	E1ADKN–994742-C	...Piston ·0004″ o/s.
	E1ADKN–994742-D	...Piston ·0006″ o/s.
	E1ADKN–994742-E	...Piston ·0008″ o/s.
22	72000–S	...Split pin
23	E1ADKN–994756	...Link
24	E1ADKN–994732	...Gasket
25	E1ADKN–994730	...Housing
26	20386–S2	...Screw
27	E1ADKN–994660	...Spacer
28	27132–S	...Screw
29	E1ADKN–994815	...Quadrant
30	E1ADKN–994809-B	...Lever assy.
31	34806–S	...Lockwasher
32	20504–S2	...Bolt
33	119290–ES2	...Lockwasher
34	33896–S2	...Wing nut
35	44722–S2	...Washer
36	E1ADKN–994713	...Spring
37	E1ADKN–994720	...Housing assy.
38	73859–S	...Clevis pin
39	E1ADKN–994748	...Lever
40	BB–7245	...Screw
41	E1ADKN–994614	...Gasket
42	E1ADKN–994624	...Seal
43	E1ADKN–994731-A	...Cover
44	E1ADKN–994737	...Guard
45	E1ADKN–994744	...Stop
46	33798–S	...Nut

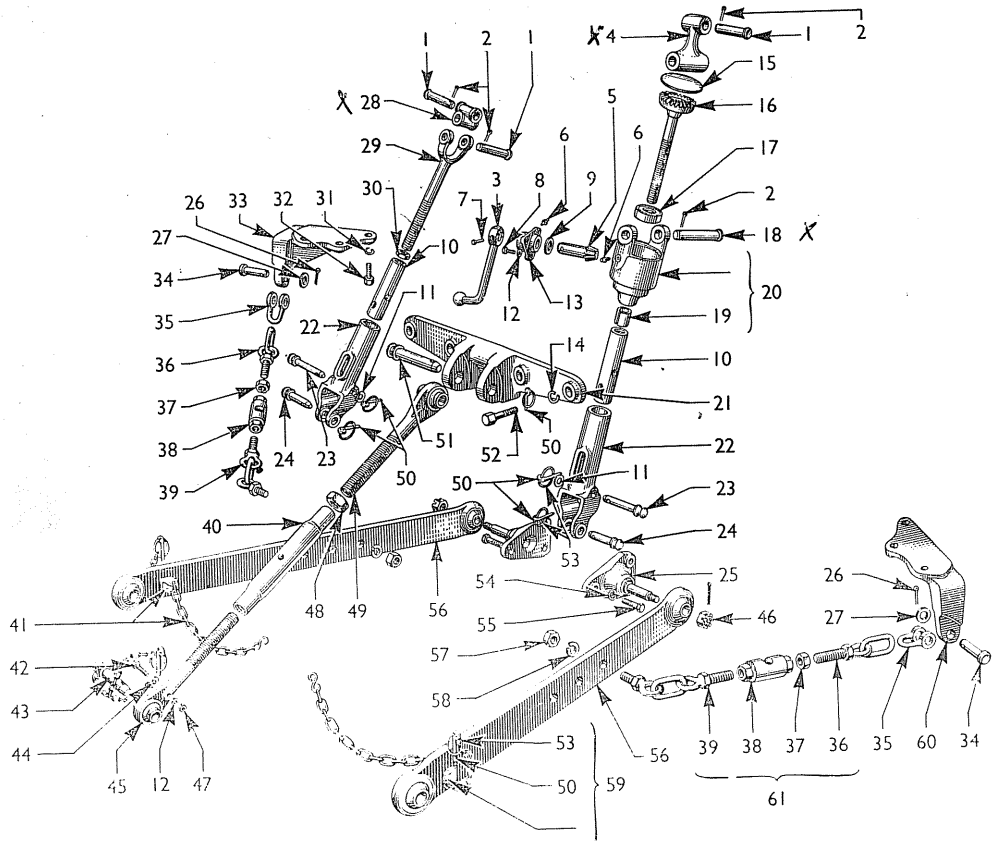
1
2
1
4
1
2
15
28
16
5
29
6
6
17
30
7
3
8
9
2
26
33
32
31
18
27
10
34
11
20
35
22
19
14
36
10
37
21
38
24
23
51
52
50
22
39
50
50
11
23
40
53
24
54
25
26
48
49
56
55
46
27
41
57
42
58
43
53
56
39
38
37
36
35
60
34
44
50
59
45
12
47
61

Ref.	Part No.	Description
1	E27N–995282	...Pin
2	72035–S	...Split pin
3	E27N–995157	...Lever
4	E1ADKN–995164	...Knuckle
5	E27N–995207-B	...Pinion
6	353043–A-S7	...Lubricator
7	60551–S	...Rivet
8	20344–S	...Screw
9	E27N–995155	...Collar
10	E1ADKN–995288	...Sleeve
11	44742–S	...Washer
12	34805–S	...Lockwasher
13	E27N–995156	...Bracket
14	34811–S	...Lockwasher
15	E27N–995168	...Plug
16	E1ADKN–995159	...Gear
17	7V–3123-B	...Bearing
18	E27N–995165	...Pin
19	E27N–995161	...Bush
20	E27N–995152	...Box assy.
21	E1ADKN–995203-A	...Bracket (less A.C.R.)
	E1ADKN–995203-B	...Bracket(withA.C.R.)
22	E1ADKN–995261	...Clevis
23	E1ADKN–995250	...Pin
24	E27N–995295	...Pin
25	E1ADKN–995236	...Bracket
26	72057–S	...Split pin
27	119306–ES2	...Washer
28	E27N–995262-A	...Knuckle
29	E1ADKN–995260	...Rod
30	34676–S	...Locknut
31	34811–S	...Lockwasher
32	45754–S	...Screw
33	E1ADKN–995180-B	...Bracket L. H.
34	119953–ES7/8	...Pin
35	E1ADKN–995299-A	...Shackle
36	E1ADKN–995183-A	...Eyebolt
37	34674–S	...Locknut
38	E1ADKN–995192	...Nut
39	E1ADKN–995191-A	...Eyebolt
40	E27N–995265-A	...Body
41	E27N–995170	...Chain assy.
42	20484–S	...Bolt
43	E27N–995248	...Pin
44	E27N–995286	...Chain assy.
45	E27N–995267	...Link
46	45304–S	...Nut
47	33795–S	...Nut
48	E27N–995271	...Nut
49	E27N–995266	...Link
50	E27N–995217	...Linch pin
51	E27N–995272	...Pin
52	45754–S	...Screw
53	E27N–995279	...Ring
54	34810–S2	...Lockwasher
55	21044–S	...Screw
56	E1ADKN–995162-A	...Link
57	34674–S	...Nut
58	34813–S	...Lockwasher
59	E27N–995225	...Chain assy.
60	E1ADKN–995179-B	...Bracket R. H.
61	E1ADKN–995249-A	...Chain assy.

H. P. L. LINKAGE

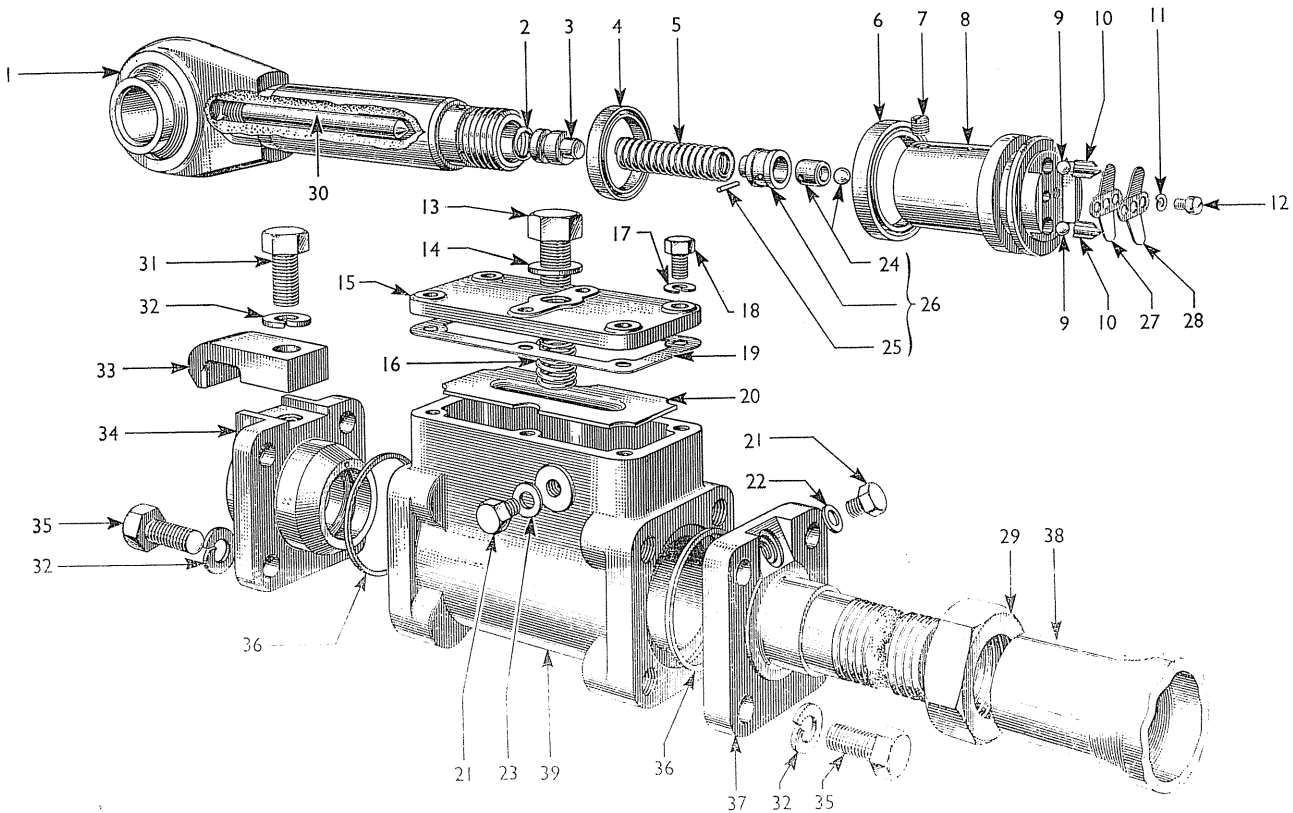
1
2
3
4
5
6
7
8
9
10
11
12
13
14
15
16
17
18
19
20
21
22
23
24
25
26
27
28
29
30
31
32
33
34
35
36
37
38
39

Ref.	Part No.	Description	Ref.	Part No.	Description

H. P. L. AUTOMATIC CLUTCH RELEASE MECHANISM

1	E27N–995860	...Adjuster
2	E27N–995862	...Seal
3	E27N–995861	...Piston
4	E27N–995858	...Seal
5	E27N–995867	...Spring
6	E27N–995853	...Seal
7	89757–S	...Screw
8	E27N–995851	...Piston
9	353080–S	...Ball
10	E27N–995872	...Cage
11	34803–S	...Lockwasher
12	31583–S7/8	...Screw
13	20352–S	...Bolt
14	E27N–995890	...Washer
15	E27N–995869	...Cover
16	E27N–995892	...Spring
17	34805–S	...Lockwasher
18	20324–S	...Screw
19	E27N–995887	...Gasket
20	E27N–995891	...Plate
21	E27N–995388	...Plug
22	E27N–995390	...Washer
23	BE–9357	...Washer
24	E27N–995863	...Housing
25	73241–S	...Pin
26	E27N–995864	...Valve
27	E27N–995855	...Spring
28	E27N–995880	...Plate
29	E27N–995271	...Locknut
30	E27N–995860	...Adjuster
31	20410–S	...Screw
32	34808–S	...Lockwasher
33	E27N–995881	...Plate
34	E27N–995856	...Cover
35	20390–S2	...Screw
36	E27N–995859	...Seal
37	E27N–995868	...Cover
38	E27N–995877	...Body
39	E27N–995875	...Cylinder

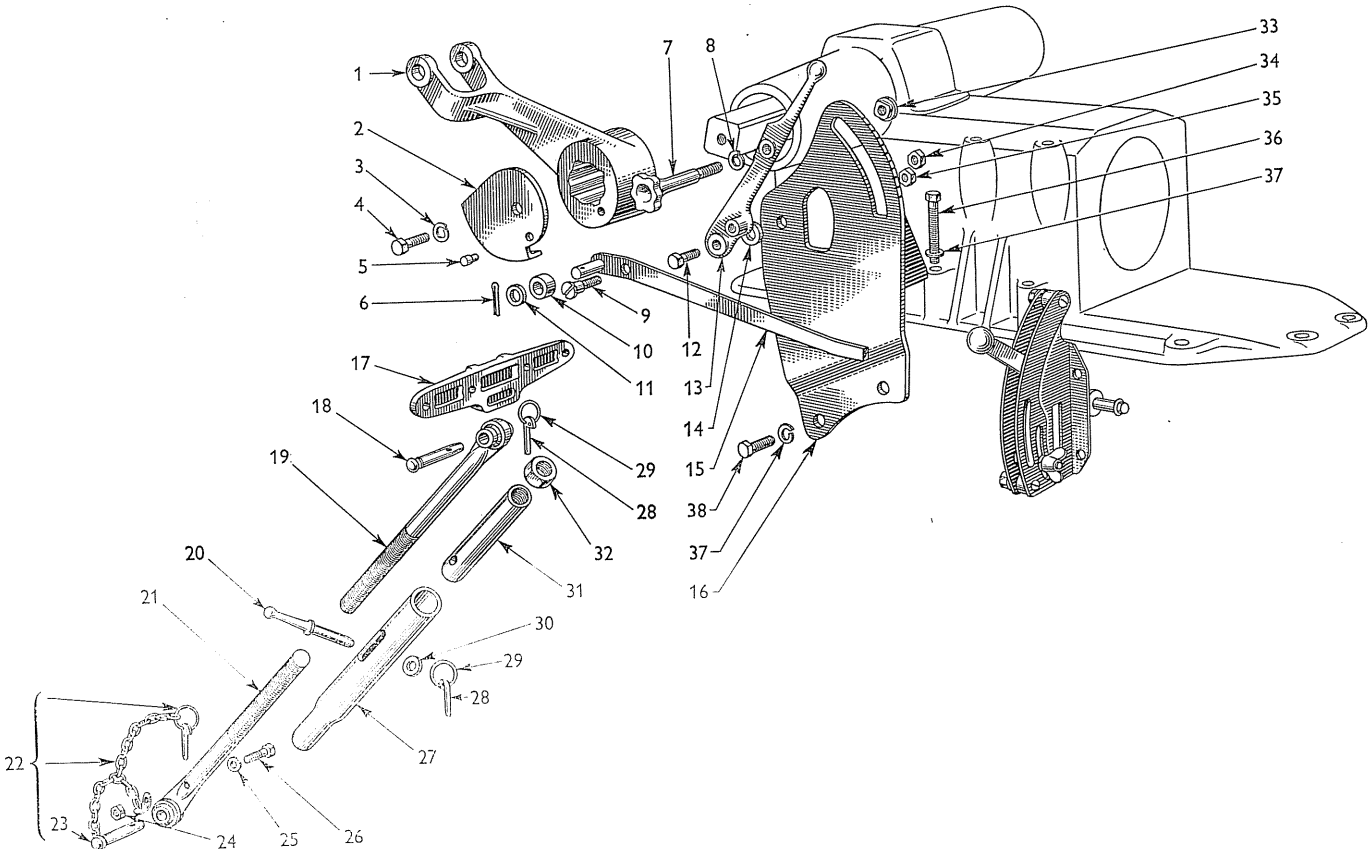
1
2
3
4
5
6
7
8
9
10
11
12
13
14
15
16
17
18
19
20
21
22
23
24
25
26
27
28
29
30
31
32
33
34
35
36
37
38
37
28
29

Ref.	Part No.	Description	Ref.	Part No.	Description

PRE-SET LINKAGE

1	E1ADKN–994620	...Arm R. H.
2	E16–QF-9	...Cam
3	34809–S	...Lockwasher
4	20353–S	...Bolt
5	E9–QF-9	...Dowel
6	72017–S	...Split pin
7	E4–QF-9	...Screw
8	118209–ES	...Lockwasher
9	E10–QF-9	...Bolt
10	E7–QF-9	...Roller
11	44734–S	...Washer
12	118739–ES	...Bolt
13	E3–QF-9	...Lever
14	E1ADKN–8487-B	...Pad
15	E6–QF-9	...Arm
16	E2–QF-9	...Quadrant
17	E1ADKN–995203-A	...Bracket
18	E27N–995272	...Pin
19	E27N–995266	...Link
20	E13–QF-9	...Pin
21	E27N–995267	...Link
22	E27N–995286	...Linch pin assy.
23	E27N–995248	...Pin
24	33795–S	...Nut
25	34805–S	...Lockwasher
26	20484–S	...Bolt
27	E11–QF-9	...Body
28	E27N–995217	...Linch pin
29	E27N–995279	...Ring
30	44742–S	...Washer
31	E12–QF-9	...Sleeve
32	E27N–995271	...Locknut
33	E5–QF-9	...Nut
34	34671–S	...Nut
35	34447–S	...Nut
36	20550–S	...Bolt
37	34810–S	...Lockwasher
38	21062–S	...Bolt

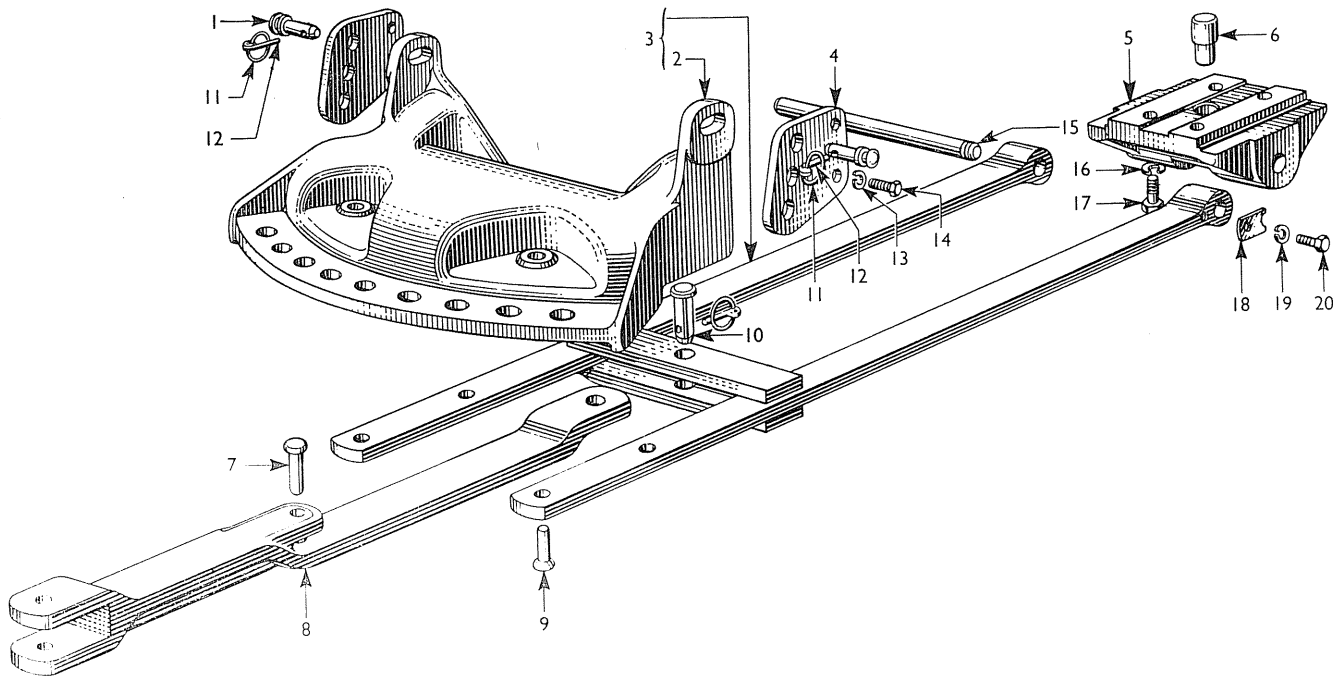
1
11
12
3
2
4
5
6
15
16
17
18
19
20
13
14
10
7
8
9

Ref.	Part No.	Description	Ref.	Part No.	Description

SWINGING DRAWBAR

1	E1ADKN–4745	...Pin
2	E1ADKN–4733	...Platform
3	E1ADKN–4741	...Platform assy.
4	E1ADKN–4742	...Bracket
5	E1ADKN–4736	...Bracket
6	E1ADKN–4732	...Dowel
7	E1ADKN–4737	...Pin
8	E1ADKN–4724-B	...Drawbar
9	E1ADKN–4715	...Rivet
10	E1ADKN–4727	...Pin
11	E27N–995279	...Ring
12	E27N–995217	...Pin
13	34810–S	...Lockwasher
14	N–20690-A	...Screw
15	E1ADKN–4744	...Pin
16	34810–S	...Lockwasher
17	21062–S	...Screw
18	119863–ES	...Retainer
19	34807–S	...Lockwasher
20	20349–S	...Screw

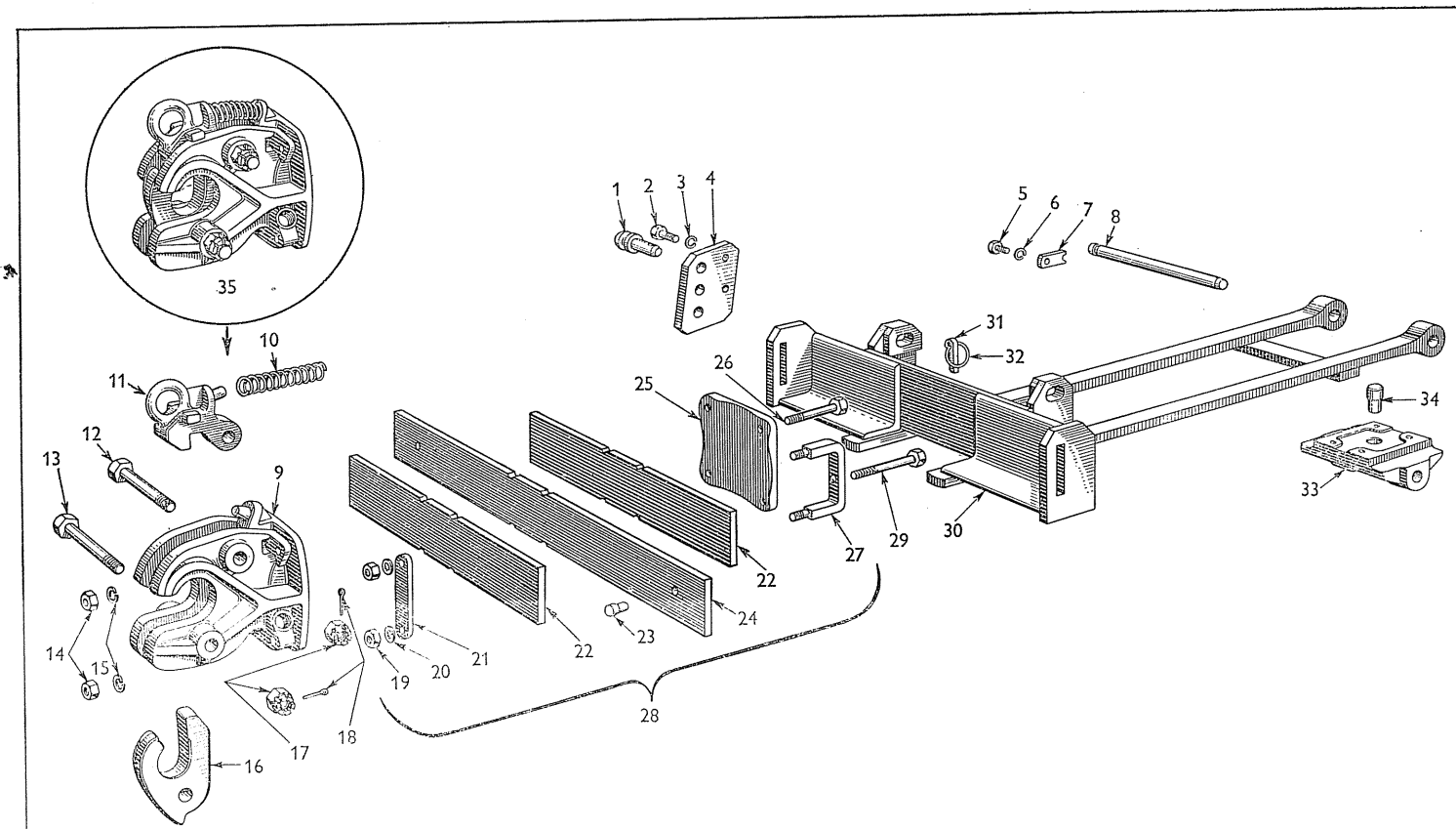
35
1
2
3
4
5
6
7
8
10
11
12
13
9
14
15
16
17
18
19
20
21
22
22
23
24
25
26
27
28
29
30
31
32
33
34

Ref.	Part No.	Description	Ref.	Part No.	Description

REAR TOWING ATTACHMENT

1	E1ADKN–4745	...Pin
2	N–20690-A	...Screw
3	34810–S	...Lockwasher
4	E1ADKN–4742	...Bracket
5	20349–S	...Screw
6	34807–S	...Lockwasher
7	119863–ES	...Retainer
8	E1ADKN–4744	...Pin
9	E1ADKN–4721	...Body
10	N–6513	...Spring
11	N–4723	...Latch
12	22391–ES	...Bolt
13	22451–ES	...Bolt
14	33847–S	...Nut
15	34810–S	...Lockwasher
16	N–4722	...Hook
17	N–21943	...Nut
18	72053–S	...Split pin
19	FN–108-K	...Nut
20	34909–S2	...Washer
21	E27N–4790	...Plate
22	E27N–4787	...Leaf
23	E27N–4754	...Dowel
24	E27N–4788	...Leaf
25	E27N–4748	...Plate
26	119178–ES	...Bolt
27	E27N–4789	..." U " bolt
28	E27N–4746	...Spring assy.
29	119179–ES	...Bolt
30	E27N–4791	...Frame assy.
31	E27N–995217	...Linch pin
32	E27N–995279	...Ring
33	E1ADKN–4736	...Bracket
34	E1ADKN–4732	...Dowel
35	E1ADKN–4720	...Coupler assy.

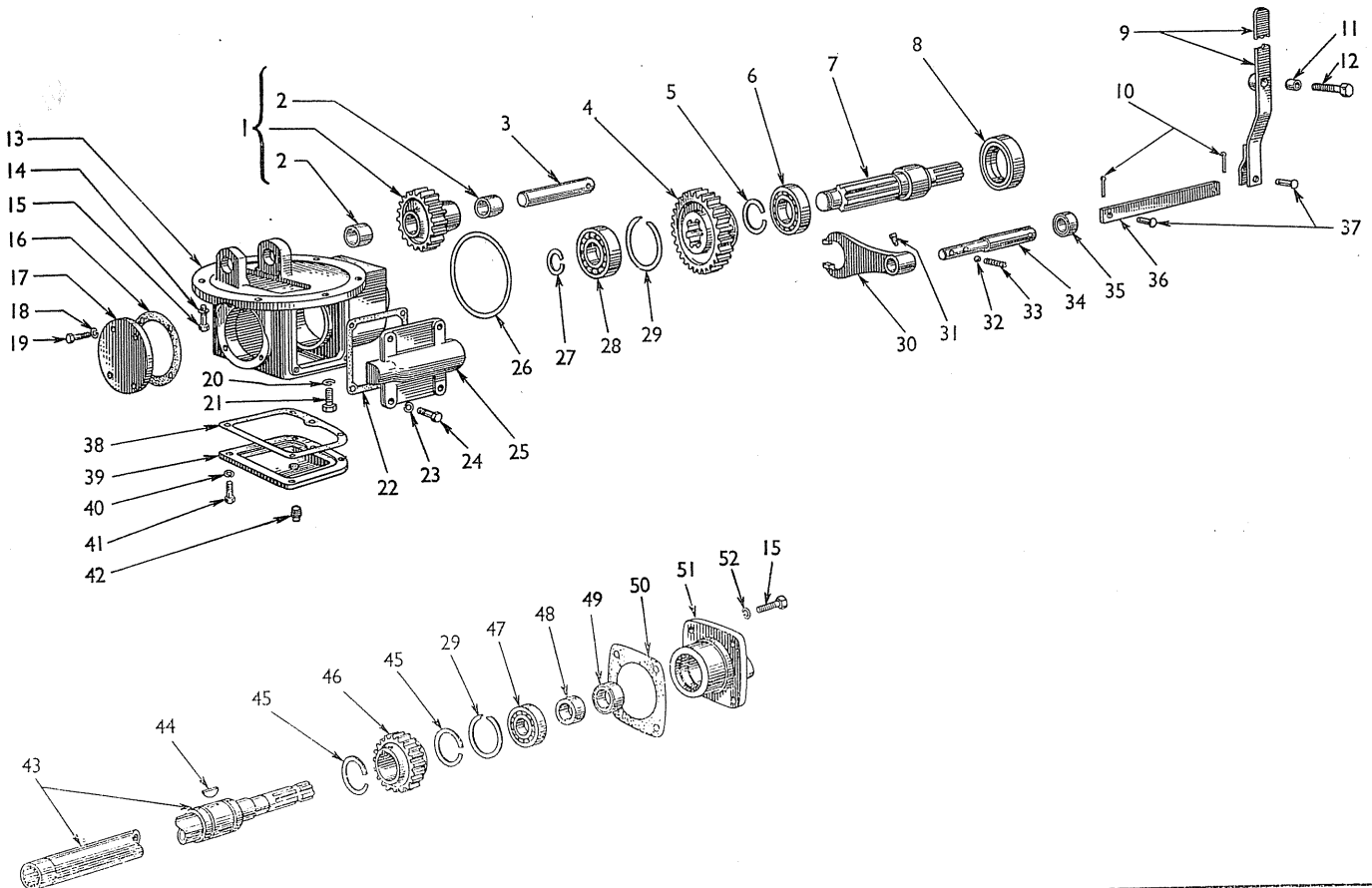
1
2
2
2
3
4
5
6
7
8
9
10
11
12
13
14
15
16
17
18
19
20
21
22
23
24
25
26
27
28
29
30
31
32
33
34
35
36
37
38
39
40
41
42
43
44
45
45
46
29
47
48
49
50
51
52
15

Ref.	Part No.	Description	Ref.	Part No.	Description

STANDARD POWER TAKE-OFF

1	E1ADKN–7280	...Gear assy.
2	E1ADKN–7259	...Bush
3	E1ADKN–7281	...Shaft
4	E1ADKN–7254	...Gear
5	BB–7045	...Ring
6	BB–7025	...Bearing
7	E1ADKN–7255	...Shaft
8	E1ADKN–7297-A	...Seal
9	E1ADKN–7270	...Lever
10	72017–S	...Split pin
11	E1ADKN–7271	...Bush
12	20532–S2	...Bolt
13	E1ADKN–7252	...Housing
14	34809–S2	...Lockwasher
15	20452–S	...Screw
16	E1ADKN–77013	...Gasket
17	E1ADKN–77012	...Cap
18	34807–S	...Lockwasher
19	20388–S2	...Screw
20	34811–S	...Lockwasher
21	118973–ES	...Screw
22	E1ADKN–7299	...Gasket
23	34807–S	...Lockwasher
24	20388–S2	...Screw
25	E1ADKN–7298	...Housing
26	E1ADKN–7248	...Seal
27	E1ADKN–7256	...Ring
28	BB–7065	...Bearing
29	E1ADKN–7261	...Ring
30	E1ADKN–7292	...Fork
31	BB–7245	...Screw
32	353075–S	...Ball
33	BB–7234	...Spring
34	E1ADKN–7266	...Shaft
35	E27N–7262-A	...Seal
36	E1ADKN–7269	...Link
37	73904–S	...Clevis pin
38	E1ADKN–77267	...Gasket
39	E1ADKN–77266	...Cover
40	34828–S	...Lockwasher
41	20410–S2	...Screw
42	353051–ES	...Plug
43	E1ADKN–7260	...Shaft
44	74164–S	...Key
45	E1ADKN–994664	...Ring
46	E1ADKN–994649	...Gear
47	B–7025-A	...Bearing
48	E27N–7278	...Sleeve
49	E27N–7305-A	...Seal
50	E1ADKN–7264	...Gasket
51	E1ADKN–7263	...Retainer
52	34809–S2	...Lockwasher

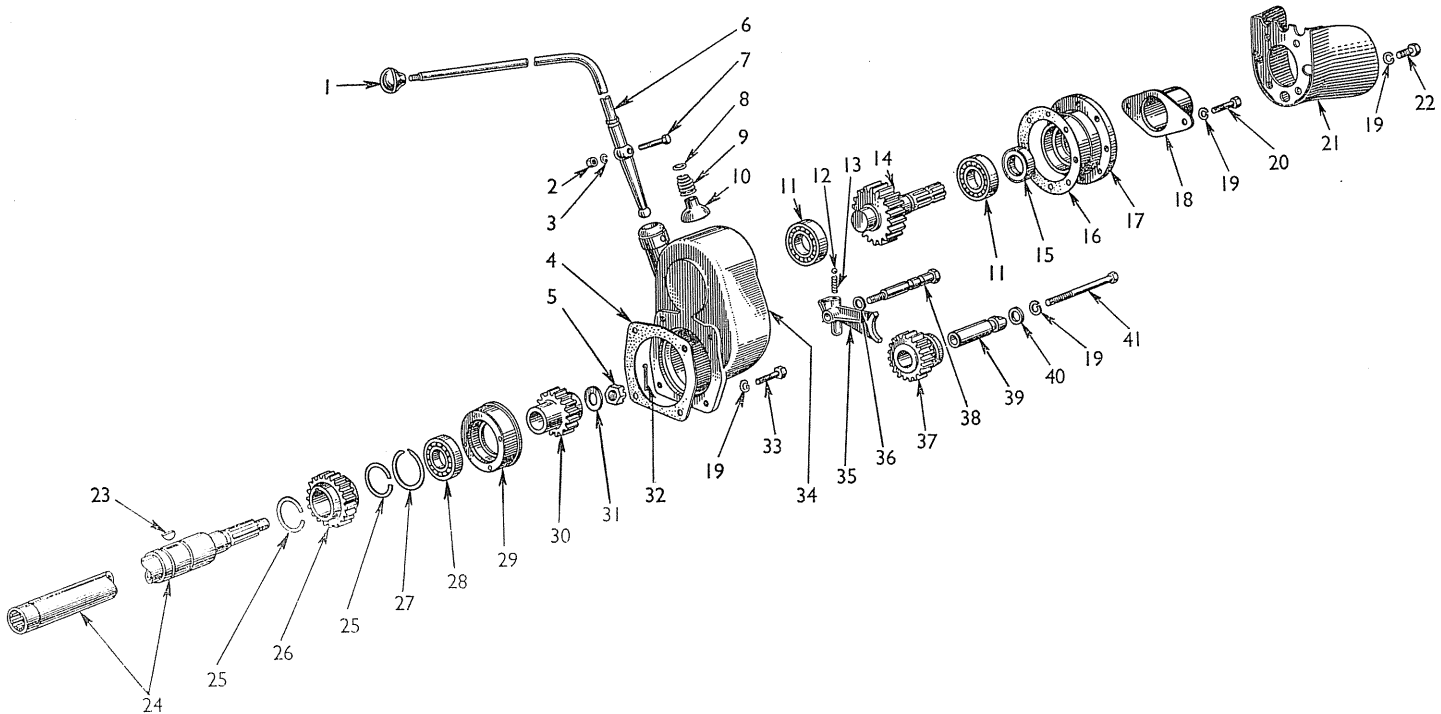
1
2
3
4
5
6
7
8
9
10
11
12
13
14
15
16
17
18
19
20
21
22
23
24
25
26
25
27
28
29
30
31
32
19
33
34
35
36
37
38
39
40
19
41
11
19

Ref.	Part No.	Description	Ref.	Part No.	Description

RAISED POWER TAKE-OFF

1	EBB–7213	...Knob
2	33800–S	...Nut
3	34807–S2	...Lockwasher
4	E20–GE–9	...Gasket
5	45304–S	...Nut
6	E16–GE–9	...Lever
7	118884–ES	...Bolt
8	N–7228	...Ring
9	N–7227	...Spring
10	N–7220–B	...Retainer
11	E0A–1225–A	...Bearing
12	353075–S	...Ball
13	BB–7234	...Spring
14	E11–GE–9	...Shaft
15	E27N–7305–A	...Seal
16	E22–GE–9	...Gasket
17	E13–GE–9	...Retainer
18	E15–GE–9	...Cover
19	34808–S2	...Lockwasher
20	20350–S2	...Screw
21	E26–GE–9	...Guard
22	20372–S2	...Bolt
23	74164–S	...Key
24	E17–GE–9	...Shaft
25	E1ADKN–994664	...Ring
26	E1ADKN–994649	...Gear
27	E34–GE–9	...Ring
28	N–115069–A	...Bearing
29	E8–GE–9	...Retainer
30	E7–GE–9	...Gear
31	44751–S	...Washer
32	72090–S	...Split pin
33	20510–S2	...Screw
34	E21–GE–9	...Housing
35	E25–GE–9	...Shifter
36	E1ADKN–994570	...Seal
37	E3–GE–9	...Gear
38	E23–GE–9	...Shaft
39	E24–GE–9	...Shaft
40	E1ADKN–994572	...Seal
41	22127–ES	...Screw

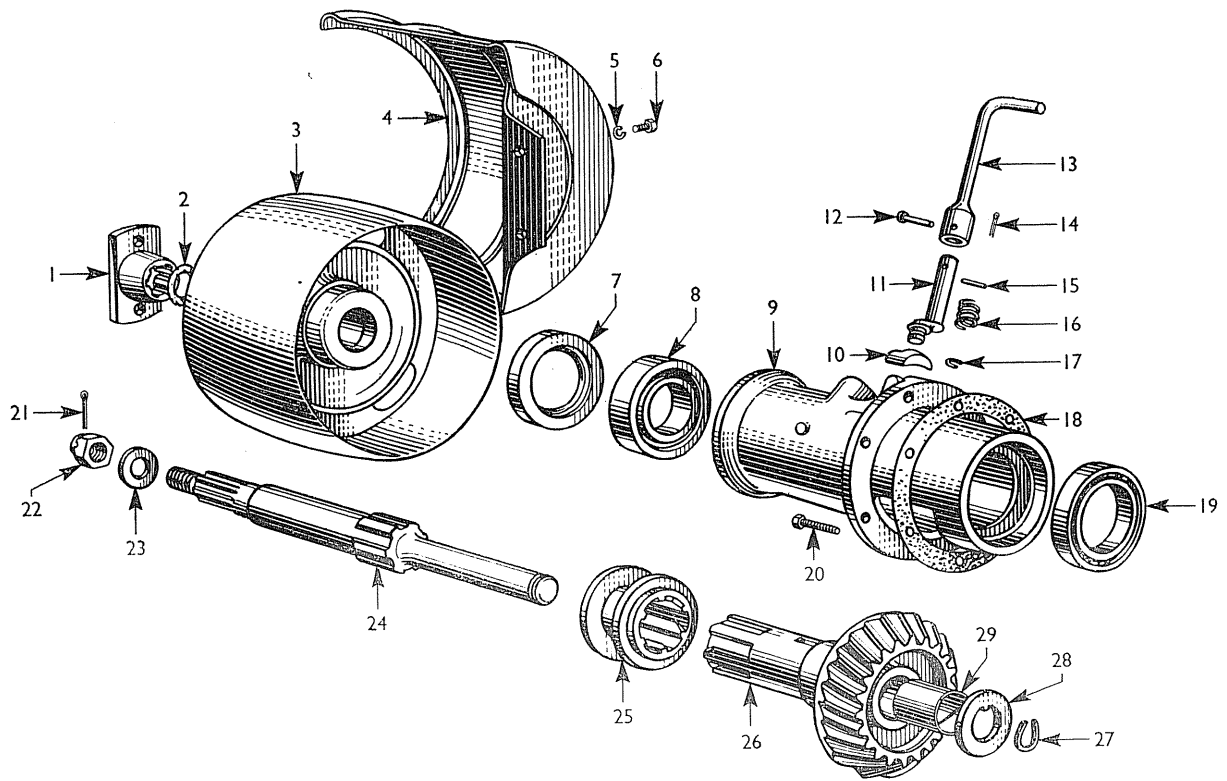
1
2
3
4
5
6
7
8
9
10
11
12
13
14
15
16
17
18
19
20
21
22
23
24
25
26
27
28
29

Ref.	Part No.	Description	Ref.	Part No.	Description

PULLEY AND DRIVE GEAR

1	N–115060-A	...Bush
2	E1ADKN–115103	...Gasket
3	E1ADKN–115051	...Pulley
4	E1ADKN–115039	...Guard
5	34807–S	...Lockwasher
6	20348–S2	...Screw
7	N–115080-B	...Retainer
8	N–7065-B	...Bearing
9	E1ADKN–115065	...Housing
10	N–115094	...Block
11	N–115093-A	...Lever
12	51–2639	...Pin
13	E1ADKN–115090	...Handle
14	72004–S	...Split pin
15	72264–S8	...Pin
16	N–115095-A	...Spring
17	N–115096	...Ring
18	N–7166-A	...Gasket
19	N–115069-B	...Bearing
20	20432–S2	...Screw
21	72053–S	...Split pin
22	34001–S	...Nut
23	N–22393	...Washer
24	N–115068	...Shaft
25	N–115091-A	...Shifter
26	E1ADKN–115066	...Gear
27	E15–GA-1	...Ring
28	E1ADKN–1195	...Washer
29	N–3517-A	...Bush

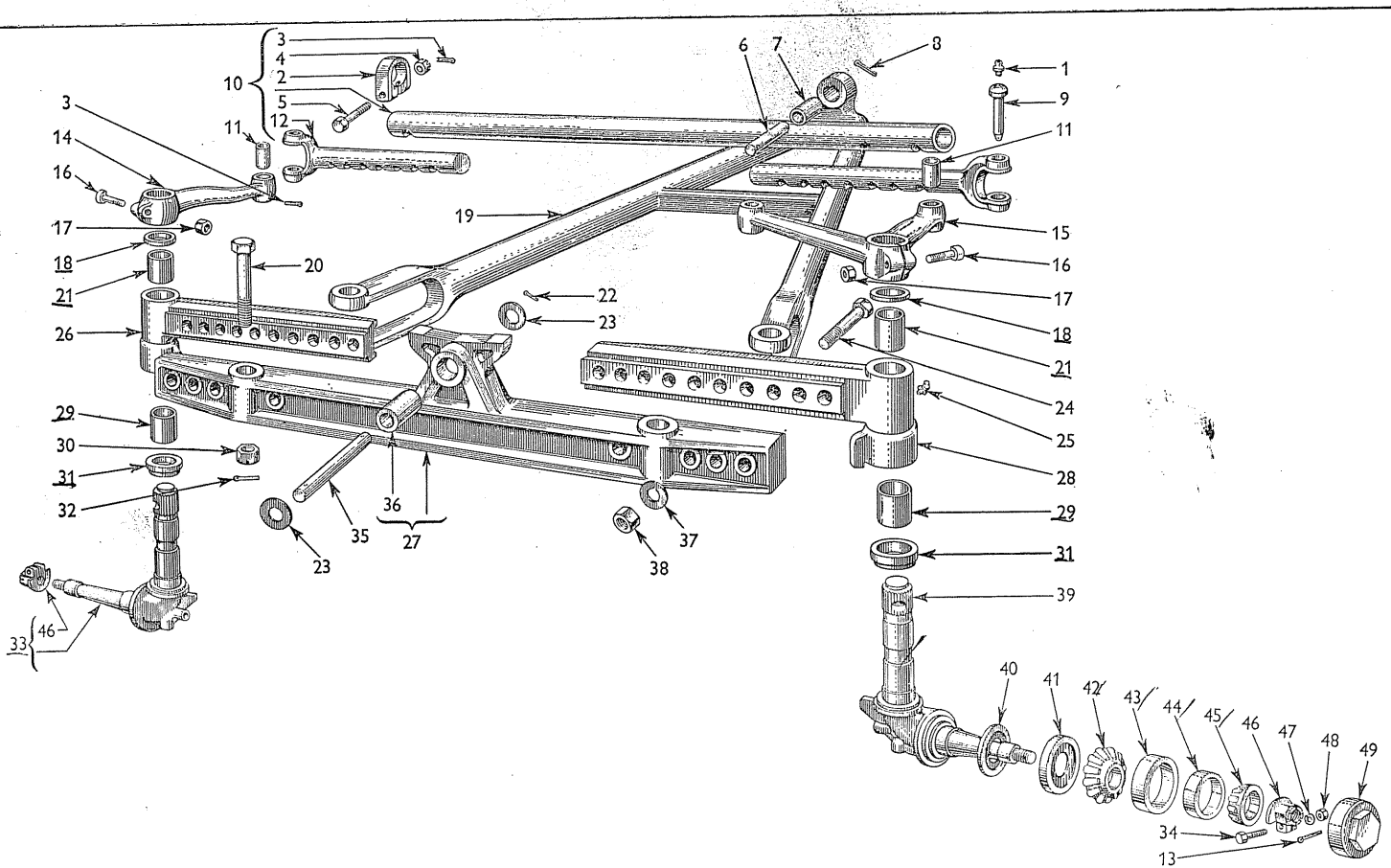
3
4
2
5
12
10
11
3
14
16
17
18
21
26
29
30
31
32
33
46
20
19
6
7
8
1
9
11
15
16
17
18
21
22
23
24
25
28
29
31
39
40
41
42
43
44
45
46
47
48
49
34
13
36
27
35
23
37
38

Ref.	Part No.	Description

FRONT AXLE

1	353026–S7/8	...Lubricator
2	E27N–3287	...Clip
3	72035–S	...Split pin
4	33983–S	...Nut
5	22298–ES	...Bolt
6	N–3413-C	...Pin
7	N–3407	...Bush
8	72148–S	...Split pin
9	N–3287	...Pin
10	E27N–3280-B	...Rod assy.
11	N–3134	...Bush
12	E27N–3289-A	...End
13	72071–S	...Split pin
14	E1ADKN–3132	...Arm R. H.
15	E1ADKN–3133-B	...Arm L. H.
16	20557–ES2	...Bolt
17	34449–ES2A	...Nut
18	E27N–3528-B	...Seal
19	E27N–3405-D	...Rod
20	22451–ES	...Bolt
21	E27N–3109	...Bush
22	72095–S	...Split pin
23	N–22426	...Washer
24	E27N–3248	...Bolt
25	353027–S7	...Lubricator
26	E27N–3240	...Extension R. H.
27	E27N–3004-B	...Axle assy.
28	E27N–3241	...Extension L. H.
29	E27N–3110	...Bush
30	45302–S	...Nut
31	E27N–3132-B	...Bearing
32	72071–S	...Split pin
33	E1ADKN–3105	...Spindle R. H.
34	20469–S2	...Bolt
35	N–3006	...Trunnion
36	N–3005	...Bush
37	34815–S	...Lockwasher
38	34679–S	...Nut
39	E1ADKN–3106	...Spindle L. H.
40	E27N–1193	...Felt
41	E27N–1190-B	...Ring
42	E27N–1201	...Cone
43	N–1202-A	...Cup
44	N–1217	...Cup
45	N–1216	...Cone
46	E27N–3161-B	...Nut
47	34827–S	...Lockwasher
48	33800–S	...Nut
49	E27N–1128	...Cap

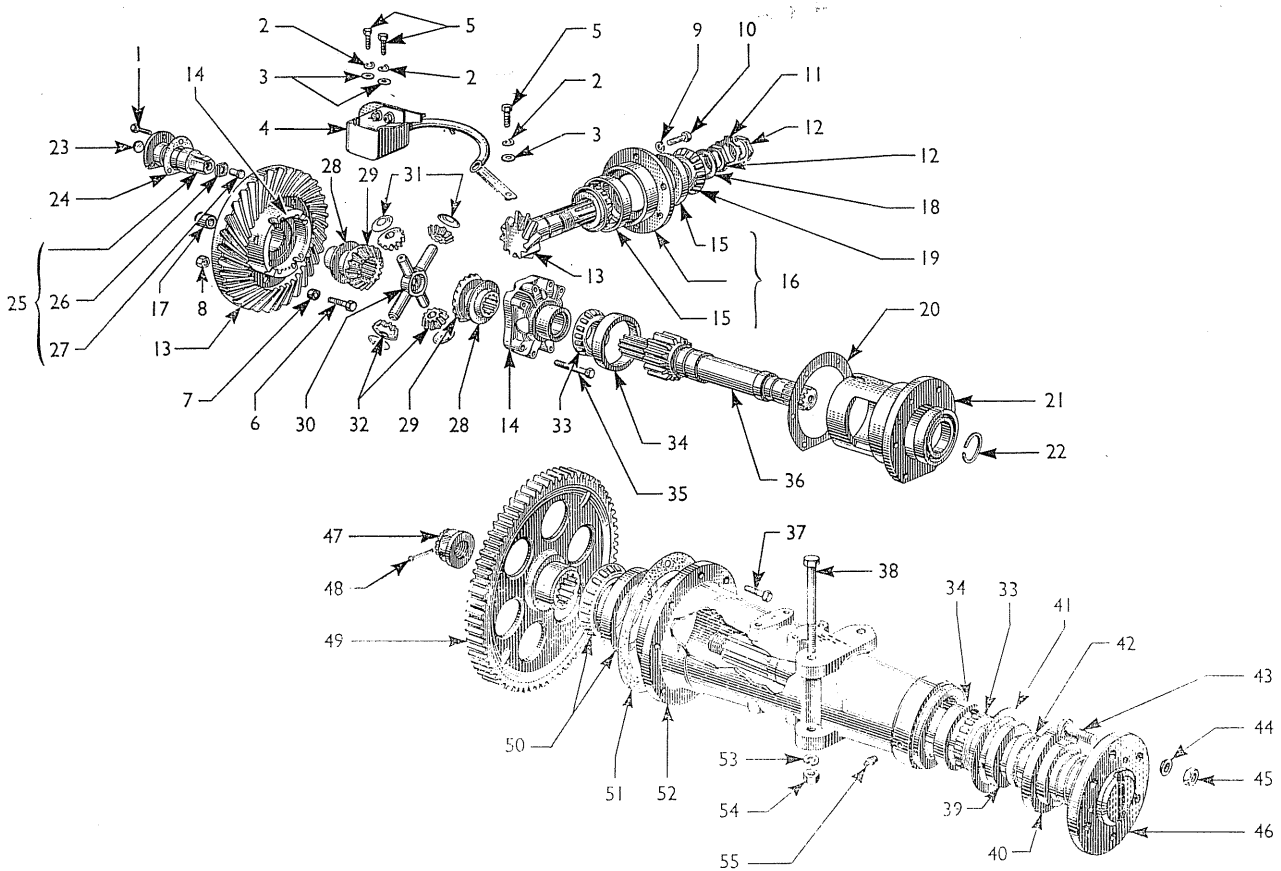
1
2
3
4
5
6
7
8
9
10
11
12
13
14
15
16
17
18
19
20
21
22
23
24
25
26
27
28
29
30
31
32
33
34
35
36
37
38
39
40
41
42
43
44
45
46
47
48
49
50
51
52
53
54
55

ef.	Part No.	Description	Ref.	Part No.	Description

REAR AXLE

	20410–S	...Screw
2	34806–S	...Lockwasher
3	34746–S	...Washer
4	E27N–4320	...Deflector
5	20327–S2	...Screw
6	115605–ES	...Bolt
7	E21–EB–9	...Spacer
8	34447–ES	...Nut
9	34810–S	...Lockwasher
0	21026–S	...Screw
1	E27N–4636	...Washer
2	E27N–4634	...Locknut
3	E1ADKN–4209	...Gear & Pinion
4	E1ADKN–4204	...Case assy.
5	E27N–4616	...Cup
6	E27N–4614–A	...Housing
7	E20–EB–9	...Bush
8	E27N–4667	...Washer
9	E27N–4621	...Cone
0	E27N–4303–B	...Shim ·005″
	E27N–4303–C	...Shim ·003″
1	E27N–4308–B	...Housing R. H.
	E27N–4309–B	...Housing L. H.
2	E27N–4286	...Ring
3	N–6016	...Plug
4	E27N–4186	...Gasket
5	E27N–4178	...Housing
6	E27N–4194	...Block
7	BB–4189	...Rivet
8	E79–4228	...Washer
9	E1ADKN–4236	...Gear
0	E1ADKN–4211–B	...Spider
1	79–4230	...Washer
2	E1ADKN–4215–B	...Pinion
3	BB–4221–B	...Cone
4	BB–4222	...Cup
5	BBE–4216–F	...Screw
6	E1ADKN–4240	...Pinion
7	21026–S	...Screw
8	119185–ES2	...Bolt
9	E27N–4245–A	...Seal
0	E27N–1183	...Shell
1	E27N–1182	...Gasket
2	E27N–1180	...Felt
3	E27N–1118–A	...Bolt
44	BBE–1150	...Washer
45	BBE–1120	...Nut
46	E27N–4235–D	...Shaft
47	E27N–4292–B	...Nut
48	72145–S	...Split pin
49	E27N–4258–C	...Gear
50	N–4220–B	...Bearing
51	E27N–4035	...Gasket
52	E1ADKN–4010	...Housing
53	34811–S	...Lockwasher
54	33849–S	...Nut
55	353026–ES7/8	...Lubricator

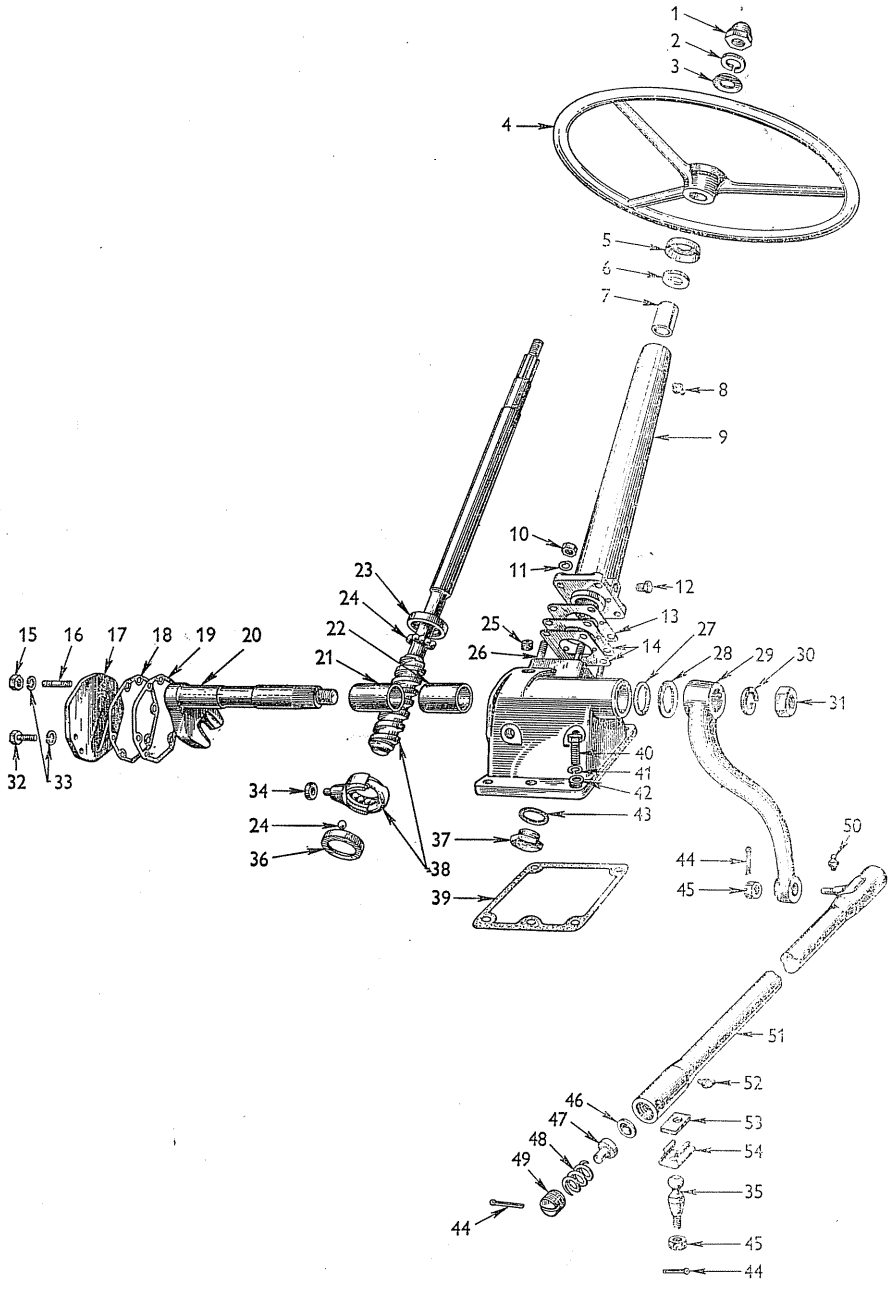
1
2
3
4
5
6
7
8
9
10
11
12
13
14
15
16
17
18
19
20
21
22
23
24
25
26
27
28
29
30
31
32
33
34
24
36
37
38
39
40
41
42
43
44
45
50
51
52
53
54
35
45
44
46
47
48
49
44

STEERING

Ref.	Part No.	Description
1	351103–S7	...Nut
2	34811–S7/8	...Lockwasher
3	F1ADKN–3673	...Washer
4	E1ADKN–3600	...Wheel
5	E1ADKN–3520	...Cap
6	N–22420	...Washer
7	N–3512–C	...Bush
8	353026–S7/8	...Lubricator
9	E1ADKN–3509	...Column
10	34671–S2	...Nut
11	3 308–S2	...Lockwasher
12	E.93A–3538	...Plug
13	E1ADKN–3593	...Gasket
14	E1ADKN–3594	...Shim
15	33798–S2	...Nut
16	88376–S	...Stud
17	E1ADKN–3580	...Cover
18	E1ADKN–3581	...Gasket
19	E1ADKN–33581-A/B	Shim
20	E1ADKN–3575-B	...Shaft
21	E1ADKN–3558	...Bush
22	E1ADKN–3576	...Bush
23	E1ADKN–3556	...Race
24	353075–S	...Ball
25	119768–ES	...Plug
26	119909–ES	...Stud
27	E1ADKN–3539	...Seal
28	118399–ES	...Washer
29	E1ADKN–3590	...Arm
30	34814–S2	...Lockwasher
31	351153–ES	...Nut
32	20386–ES2	...Screw
33	34806–S2	...Lockwasher
34	E1ADKN–3572	...Roller
35	E27N–3284	...Stud
36	E1ADKN–3556	...Race
37	E1ADKN–3554	...Plug
38	E1ADKN–3524-B	...Shaft
39	E1ADKN–3514	...Gasket
40	118992–ES2	...Screw
41	34809–S2	...Lockwasher
42	FW–108-A	...Washer
43	E1ADKN–33557	...Washer
44	72053–S	...Split pin
45	33987–S	...Nut
46	BE–3320	...Socket
47	E1ADKN–3326	...Seat
48	B–3327	...Spring
49	BE–3328	...Plug
50	353027–S7	...Lubricator
51	E1ADKN–3304	...Link
52	353031–S7	...Lubricator
53	E27N–3336	...Retainer
54	E27N–3338	...Cap

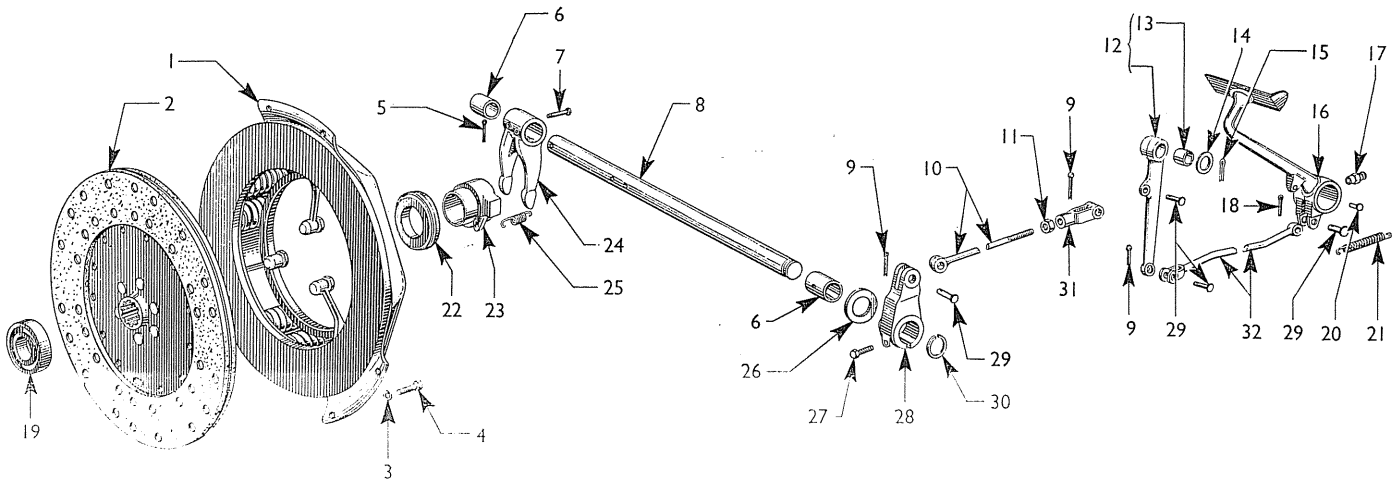
1
2
3
4
5
6
7
8
9
10
11
12
13
14
15
16
17
18
19
20
21
22
23
24
25
26
27
28
29
30
31
32

Ref.	Part No.	Description	Ref.	Part No.	Description

CLUTCH AND LINKAGE

1	E1ADKN–7563	...Plate assy.
2	E1ADKN–7550-A	...Disc assy.
3	34806–S	...Lockwasher
4	350433–S	...Screw
5	72010–S	...Split pin
6	E1ADKN–7513	...Bush
7	74014–S	...Pin
8	E1ADKN–7510-C	...Shaft
9	72017–S	...Split pin
10	E1ADKN–7531	...Rod
11	33943–ES7	...Nut
12	E1ADKN–7608-A	...Lever
13	E27N–7616	...Bush
14	E27N–7614	...Washer
15	72062–S	...Split pin
16	E1ADKN–7519	...Pedal assy.
17	353026–S7/8	...Lubricator
18	72026–S	...Split pin
19	E1ADKN–7600-A	...Bearing
20	E1ADKN–7514	...Pin
21	E1ADKN–7523	...Spring
22	78–7580-A	...Bearing (Agric.)
	E1ADKN–7580-B	...Bearing (Ind.)
23	E1ADKN–7561-A	...Hub
24	E1ADKN–7515-A	...Fork
25	E1ADKN–7562-A	...Spring
26	E27N–7596	...Washer
27	20471–S	...Bolt
28	E1ADKN–7511	...Arm
29	73951–S7	...Clevis pin
30	E27N–7547	...Ring
31	97015–S2	...Clevis
32	E1ADKN–7537	...Rod

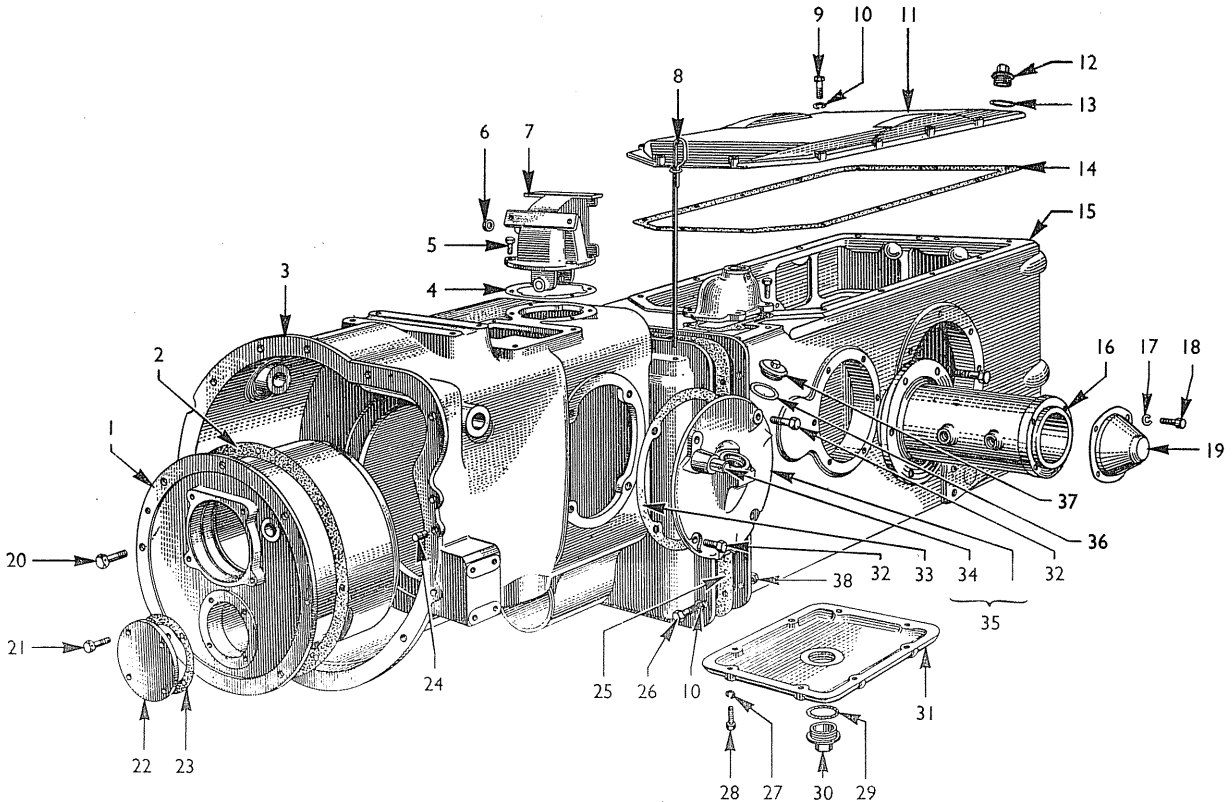
1
2
3
4
5
6
7
8
9
10
11
12
13
14
15
16
17
18
19
20
21
22
23
24
25
26
10
27
28
29
30
31
32
33
34
32
35
36
37
38

Ref.	Part No.	Description

TRANSMISSION HOUSINGS

Ref.	Part No.	Description
1	E1ADKN–77010	...Housing
2	E1ADKN–77011	...Gasket
3	E1ADKN–7004-A	...Housing (less hand-brake and speedo.)
	E1ADKN–7004-C	...Housing (with hand-brake and speedo.)
	E1ADKN–7004-E	...Housing (with hand-brake less speedo.)
4	E1ADKN–77110	...Gasket
5	20410–S	...Screw
6	E0A–7288	...Seal
7	E1ADKN–77101	...Housing
8	E27N–4333-A	...Indicator (with steel wheels)
	E27N–4333-B	...Indicator (with pneumatics)
9	20450–ES	...Screw
10	34808–S2	...Lockwasher
11	E1ADKN–4014	...Cover
12	E27N–7010-C	...Plug
13	E27N–7011-B	...Gasket
14	E1ADKN–4028	...Gasket
15	E1ADKN–4032-A	...Housing
16	E1ADKN–2219	...Housing
17	34807–S	...Lockwasher
18	20313–S	...Screw
19	E27N–4285	...Cover
20	22536–S	...Screw
21	22513–ES	...Screw
22	E1ADKN–77012	...Cap
23	E1ADKN–77013	...Gasket
24	E1ADKN–7512	...Dowel
25	E27N–4507	...Gasket
26	20517–S	...Bolt
27	E1ADKN–994567	...Washer
28	20470–ES	...Bolt
29	E27N–7011-A	...Gasket
30	E27N–7010-A	...Plug
31	E27N–4027	...Cover
32	20412–S	...Screw
33	N–7233	...Gasket
34	E1ADKN–7612-A	...Pin
35	E1ADKN–7225-A	...Plate
36	N–9624-A	...Gasket
37	E1ADKN–7224	...Plug
38	34671–ES	...Nut

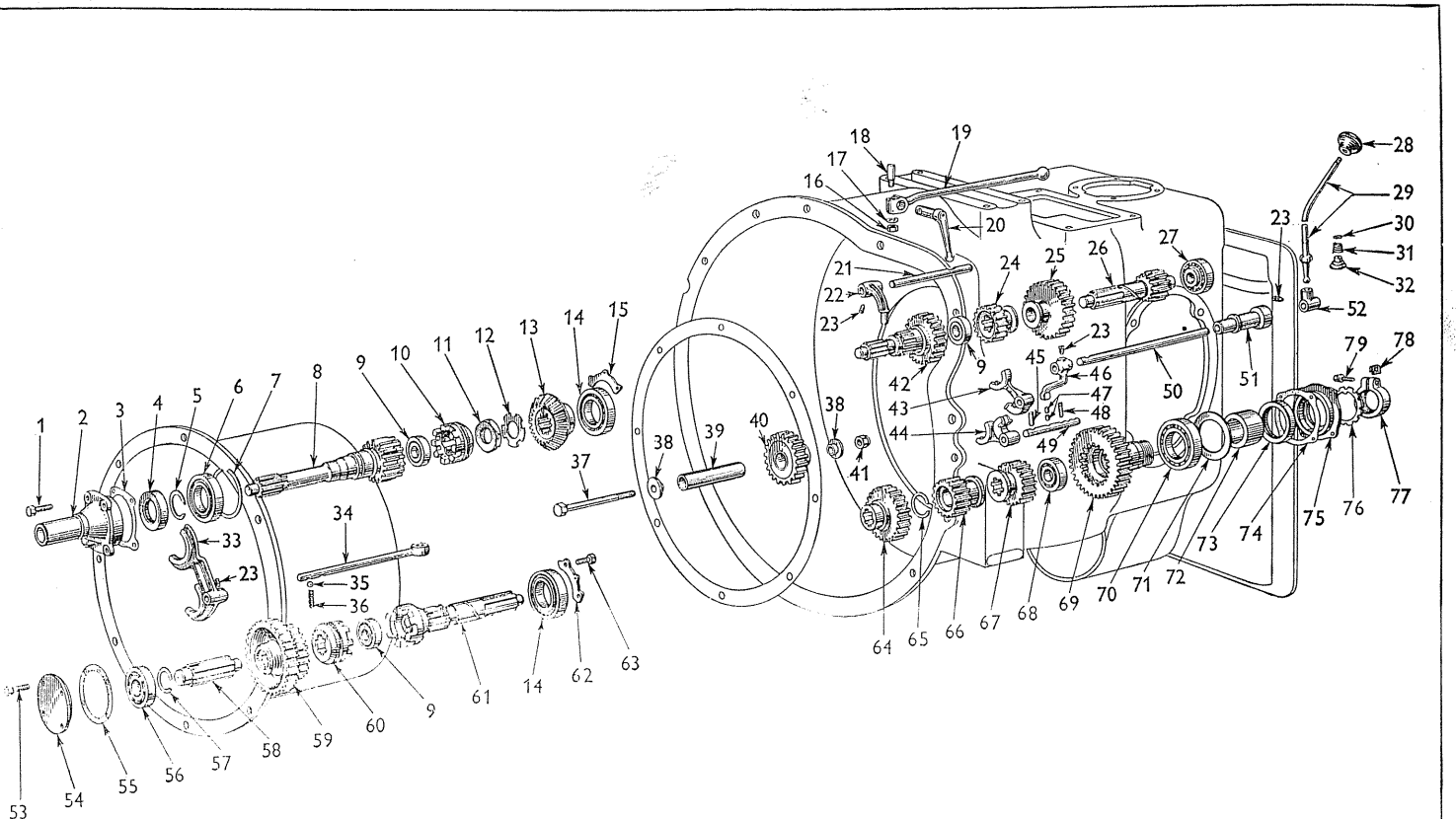
1
2
3
4
5
6
7
8
9
10
11
12
13
14
15
16
17
18
19
20
21
22
23
24
25
26
27
28
29
30
31
32
33
34
35
36
37
38
39
40
41
42
43
44
45
46
47
48
49
50
51
52
53
54
55
56
57
58
59
60
61
62
63
64
65
66
67
68
69
70
71
72
73
74
75
76
77
78
79

GEARBOX AND GEAR CHANGE

Ref.	Part No.	Description
1	22513–S	...Screw
2	E1ADKN–7050	...Retainer
3	E1ADKN–7051	...Gasket
4	E1ADKN–7052-A	...Seal
5	E1ADKN–7070	...Ring
6	E1ADKN–7025-A	...Bearing
7	E1ADKN–77014	...Ring
8	E1ADKN–7017	...Shaft
9	N–7118-D	...Bearing
10	E1ADKN–77105	...Dog
11	E1ADKN–77025	...Locknut
12	E1ADKN–77026	...Washer
13	E1ADKN–7018	...Gear
14	N–7025-E	...Bearing
15	E1ADKN–77021	...Plate
16	33800–ES	...Nut
17	34807–S	...Lockwasher
18	Y–3122	...Pin
19	E18–GB-9	...Lever
20	E20–GB-9	...Lever
21	E1ADKN–77108	...Shaft
22	E1ADKN–77109	...Connector
23	BB–7245	...Screw
24	E1ADKN–7103	...Pinion
25	E1ADKN–7114	...Gear
26	E1ADKN–7059-A	...Shaft
27	N–7065-B	...Bearing
28	EBB–7213	...Ball
29	E1ADKN–7210	...Lever
30	N–7228	...Ring
31	N–7227	...Spring
32	N–7220-B	...Retainer
33	E1ADKN–77106	...Fork
34	E1ADKN–77107	...Shaft
35	353075–S	...Ball
36	BB–7234	...Spring
37	BB–5721-B	...Bolt
38	E1ADKN–7717	...Retainer
39	E1ADKN–7140	...Shaft
40	E1ADKN–7141-B	...Gear
41	34420–ES2A	...Nut
42	E1ADKN–7024	...Shaft
43	E1ADKN–7230	...Fork
44	E1ADKN–7231	...Fork
45	N–7235	...Interlock
46	E1ADKN–7301	...Actuator
47	N–7233	...Plunger
48	N–7234	...Spring
49	E1ADKN–7240	...Shaft
50	E1ADKN–7312	...Shaft
51	E1ADKN–7319	...Sleeve
52	E1ADKN–7313	...Socket
53	22513–ES	...Screw
54	E1ADKN–77012	...Cap
55	E1ADKN–77013	...Gasket
56	BB–7065	...Bearing
57	E1ADKN–77114	...Ring
58	E1ADKN–77112	...Shaft
59	E1ADKN–77102	...Gear
60	E1ADKN–77105	...Dog
61	E1ADKN–7111	...Shaft
62	E1ADKN–77015	...Plate
63	22513–ES	...Screw
64	E1ADKN–77103	...Gear
65	E1ADKN–77104	...Ring
66	E1ADKN–7124	...Pinion
67	E1ADKN–7113	...Pinion
68	E1ADKN–7118-A	...Bearing
69	E1ADKN–7150	...Gear
70	E27N–7009	...Bearing
71	E27N–7080	...Baffle
72	E27N–7028-A	...Sleeve
73	E27N–7082-A	...Seal
74	E27N–7086	...Gasket
75	†E27N–7085-A	...Retainer
	‡E27N–7085-B	...Retainer
76	N–7012	...Washer
77	N–7013	...Locknut
78	N–7014	...Washer
79	N–21200	...Screw

† With Speedometer.

‡ Less Speedometer.

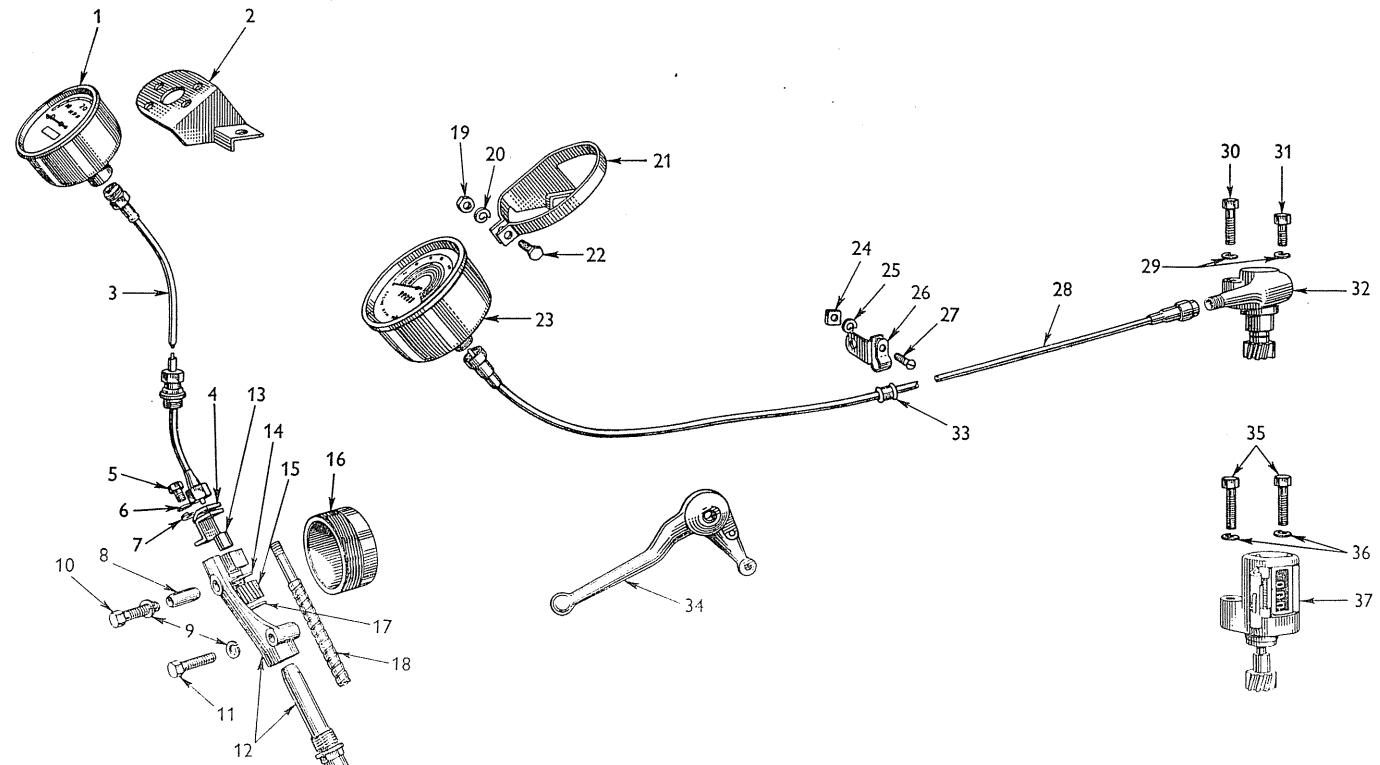
1
2
3
4
5
6
7
8
9
10
11
12
13
14
15
16
17
18
19
20
21
22
23
24
25
26
27
28
29
30
31
32
33
34
35
36
37

Ref.	Part No.	Description

SPEEDOMETER, TACHOMETER AND HOURMETER

Ref.	Part No.	Description
1	E27N–17255-C	...Head-miles
	E27N–17255-D	...Head-kilos
2	E1ADKN–17265	...Bracket
3	E1ADKN–17260-B	...Shaft & Casing
4	E27N–17264-B	...Bracket
5	20308–S	...Screw
6	44728–S	...Washer
7	34805–S	...Lockwasher
8	E27N–17283	...Bush
9	34807–S	...Lockwasher
10	20528–S	...Bolt
11	20348–S	...Bolt
12	E27N–17295	...Bracket assy.
13	N–19162	...Bush
14	E27N–17289	...Washer
15	E27N–17271	...Gear
16	E27N–17285	...Washer
17	E27N–17287	...Shaft
18	E1ADKN–17273	...Shaft
19	33796–S2	...Nut
20	34940–S2	...Lockwasher
21	†E1ADKN–17368-B	...Clamp
	*E1ADKN–17368-C	...Clamp
22	20345–S2	...Bolt
23	†E1ADKN–17360-C	...Tachometer-miles
	†E1ADKN–17360-D	...Tachometer-kilos
	*E1ADKN–17360-E	...Tachometer-miles
	*E1ADKN–17360-F	...Tachometer-kilos
24	34141–S2	...Nut
25	34903–S2	...Lockwasher
26	E1ADKN–17367	...Clip
27	27081–S2	...Bolt
28	†E1ADKN–17365-B	...Cable
	*E1ADKN–17365-C	...Cable
29	34805–S	...Lockwasher
30	†45506–S2	...Bolt
	*20444–S2	...Bolt
31	†45506–S2	...Bolt
	*20324–S2	...Bolt
32	†E1ADKN–17373-B	...Gear
	*E1ADKN–17373-C	...Gear
33	E99–NE-9	...Grommet
34	E1ADN–9805-B	...Lever-Petrol
	E1ADKN–9805-B	...Lever-V. O.
35	‡20424–S2	...Bolt
	≠45502–S2	...Bolt
36	34805–S2	...Lockwasher
37	E62–NE-9	...Hourmeter
	E77–NE-9	...Hourmeter

† A.C. type * Smith's type ‡ with E62–NE-9 ≠ with E77–NE-9

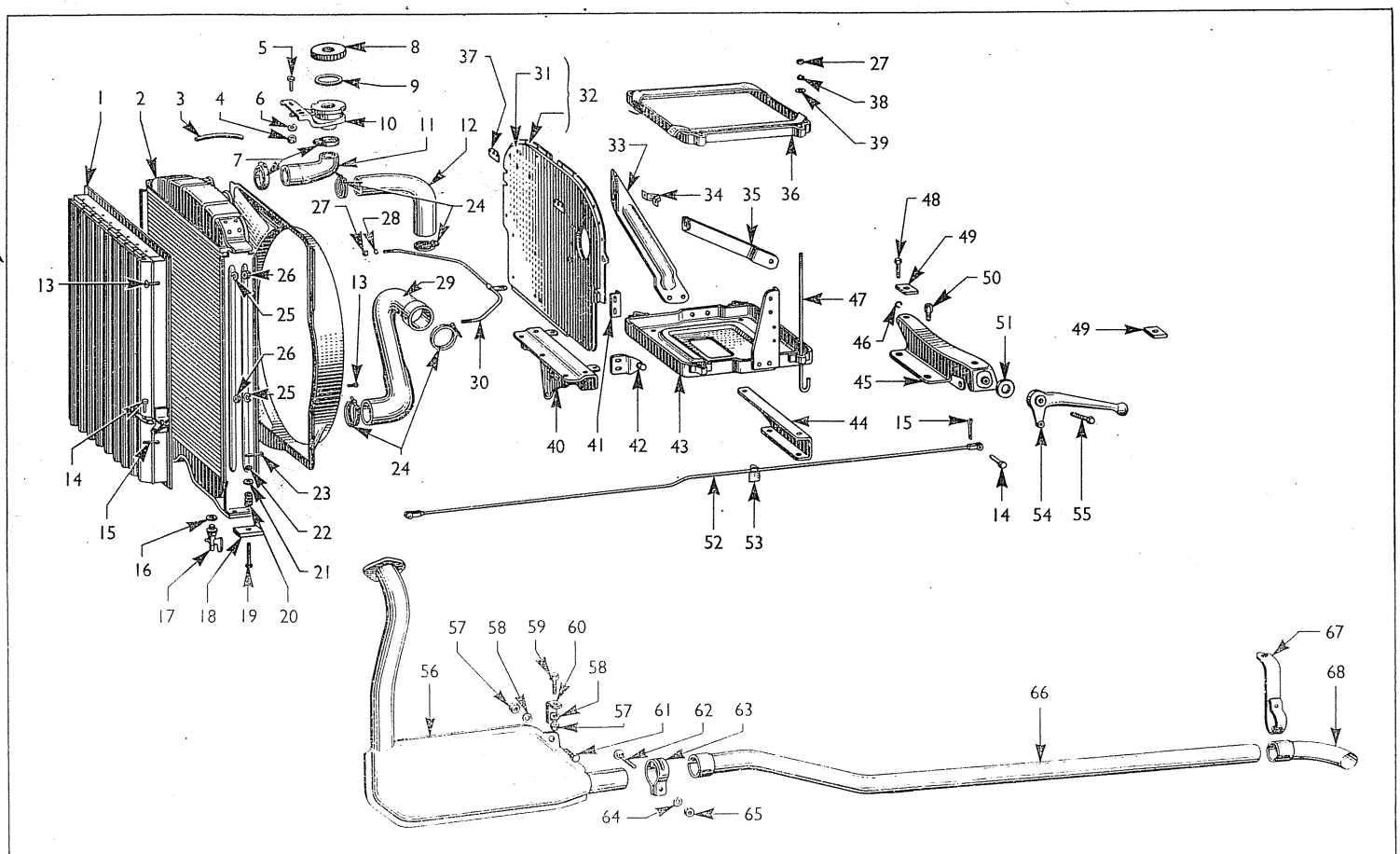
1
2
3
4
5
6
7
8
9
10
11
12
13
14
15
16
17
18
19
20
21
22
23
24
25
26
27
28
29
30
31
32
33
34
35
36
37
38
39
40
41
42
43
44
45
46
47
48
49
50
51
52
53
54
55
56
57
58
59
60
61
62
63
64
65
66
67
68

Ref.	Part No.	Description

RADIATOR, SILENCER AND TRACTOR SHELL

Ref.	Part No.	Description
1	E1ADKN-8475-A	...Shutter
2	E1ADKN-8005-E	...Radiator
3	E15-MB-9	...Hose
4	34055-S7/8	...Nut
5	38206-S7/8	...Screw
6	34805-S7/8	...Lockwasher
7	E0TA-9628-C	...Clamp
8	E1ADKN-9030-B	...Cap (Std.)
	E62A-8100-B	...Cap (Pressure)
9	E62A-8111	...Gasket
10	E23-MB-9	...Neck
11	E1ADKN-8333	...Hose
12	E1ADKN-8260	...Hose
13	27068-S2	...Screw
14	73877-S7/8	...Clevis pin
15	72003-S	...Split pin
16	E62A-8124	...Washer
17	E62A-8115	...Cock
18	E1ADKN-8125	...Pad
19	22306-ES	...Bolt
20	B-8130	...Spring
21	44726-S	...Washer
22	33979-S	...Nut
23	72026-S	...Split pin
24	E91A-8287	...Clamp
25	34803-S2	...Lockwasher
26	34079-S2	...Nut
27	33796-S2	...Nut
28	34805-S	...Lockwasher
29	E1ADKN-8286	...Hose
30	E1ADKN-8132	...Rod
31	E1ADKN-10738	...Baffle
32	E1ADKN-10741	...Baffle assy.
33	E1ADKN-10744	...Support
34	E1ADKN-16828	...Clip
35	E8-NA-9	...Support
36	E1ADDN-5163-C	...Clamp (Diesel)
	E1ADKN-5165	...Clamp (Petrol and V.O.)
37	E1ADKN-16830	...Plate
38	34918-S	...Lockwasher
39	44720-S	...Washer
40	E1ADDN-10748	...Bracket (Diesel)
	E1ADKN-10748-B	...Bracket (Petrol and V.O.)
41	E1ADKN-10753	...Bracket
42	E1ADKN-16773	...Bracket
43	E1ADDN-10734	...Tray (Diesel)
	E1ADKN-10734-B	...Tray (Petrol and V.O.)
44	E1ADDN-10749	...Bracket (Diesel)
	E1ADKN-10749-B	...Bracket (Petrol and V.O.)
45	E1ADKN-9053	...Support
46	34808-S	...Lockwasher
47	E1ADDN-5155	...Rod (Diesel)
	E1ADKN-5155	...Rod (Petrol and V.O.)
48	20370-S	...Bolt
49	E1ADKN-9066-B	...Pad
50	E1ADKN-7034	...Bolt
51	E1ADKN-8487-A	...Pad
52	E1ADKN-8486	...Rod
53	E1ADKN-88490	...Support
54	E4-MA-9	...Lever
55	20551-S2	...Bolt
56	E1ADKN-5230-A	...Silencer (Horiz.)
	E1ADKN-5230-B	...Silencer (Vert.)
57	33800-S	...Nut
58	34827-S	...Lockwasher
59	20389-S2	...Bolt
60	E1ADKN-5259	...Bracket
61	20369-S	...Bolt
62	23438-S2	...Bolt
63	E1ADKN-5260	...Clamp
64	34846-S2	...Lockwasher
65	33797-S2	...Nut
66	E1ADKN-5255	...Pipe
67	E1ADKN-5256-A	...Bracket (Agric.)
	E1ADKN-5256-B	...Bracket (Ind.)
68	E1ADKN-55265	...Pipe

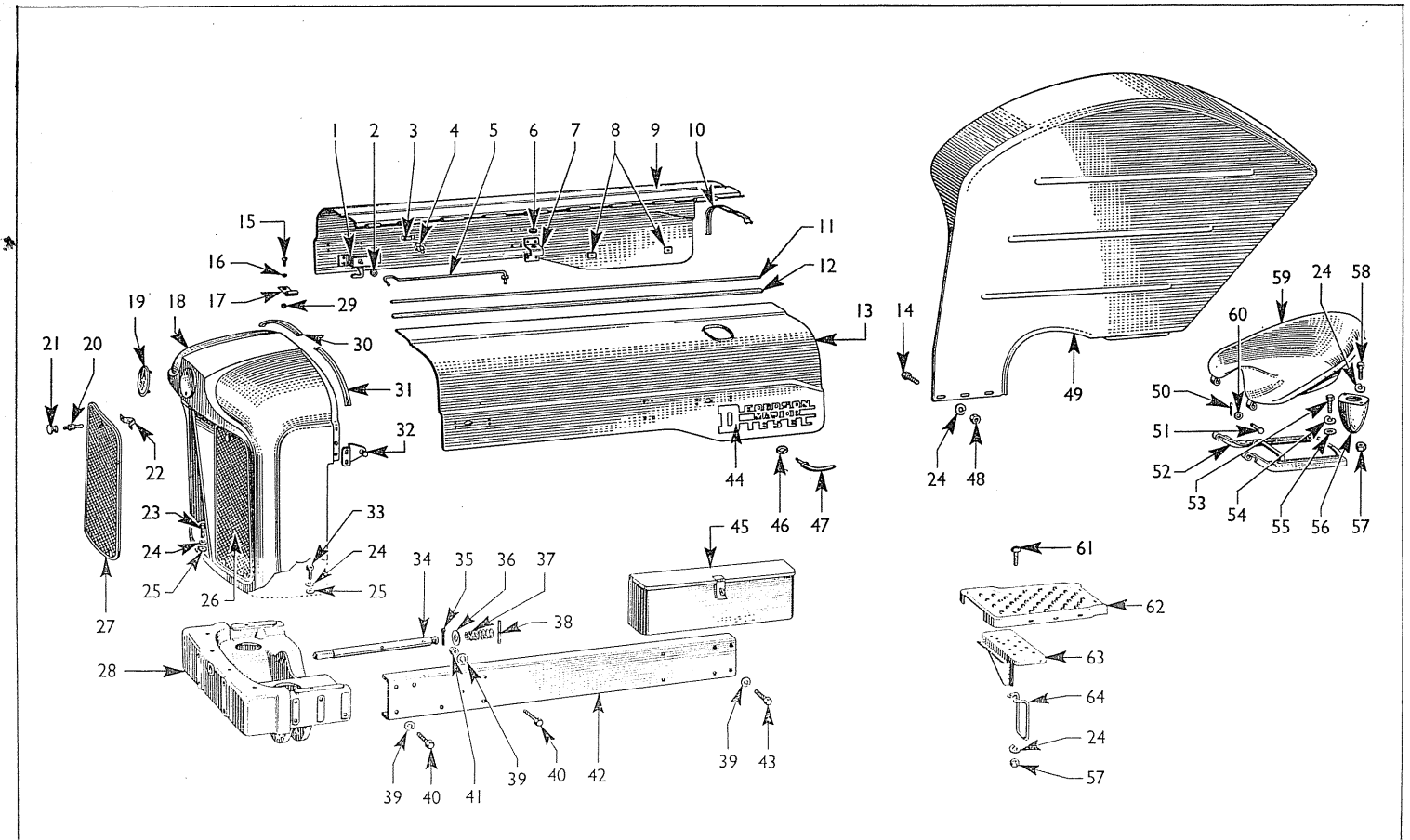
1
2
3
4
5
6
7
8
9
10
11
12
13
14
15
16
17
18
19
20
21
22
23
24
25
26
27
28
29
30
31
32
33
34
35
36
37
38
39
40
41
42
43
44
45
46
47
48
49
50
51
52
53
54
55
56
57
58
59
60
61
62
63
64

Ref.	Part No.	Description
1	E1ADKN-16658	...Lock R. H.
	E1ADKN-16659	...Lock L. H.
2	34441-ES	...Nut
3	E04A-16793-C	...Retainer
4	E04A-16788-B	...Clip
5	E1ADKN-16802	...Support R. H.
	E1ADKN-16803	...Support L. H.
6	E1ADKN-16751	...Grommet
7	E1ADKN-16804	...Bracket
8	119584-ES	...Nut
9	E1ADKN-16615-C	...Side R. H.
10	E1ADKN-16740	...Pad
11	E1ADKN-16630	...Pin
12	E1ADKN-16991	...Weatherstrip
13	E1ADKN-16616-D	...Side L. H.
14	20327-S2	...Bolt
15	36024-S7/8	...Screw
16	34805-S7/8	...Lockwasher
17	E1ADKN-16678	...Bracket
18	E1ADKN-8201	...Shell
19	E1ADKN-8212	...Ornament
20	E1ADKN-88210	...Stud
21	E1ADKN-88211	...Knob
22	E1ADKN-16828	...Clip
23	20310-S	...Screw
24	34806-S	...Lockwasher
25	44725-S	...Washer
26	E1ADKN-8151	...Grille L. H.
27	E1ADKN-8150	...Grille R. H.
28	E1ADKN-5020	...Member
29	34055-S	...Nut
30	E8-PE-9	...Pad R. H.
31	E1ADKN-8222	...Pad L. H.
32	E1ADKN-16757	...Bracket
33	20346-S	...Screw
34	E1ADKN-17037-A	...Coupling
35	72073-S	...Split pin
36	N-22426	...Washer
37	E27N-17156	...Spring
38	N-17043	...Pin
39	34809-S	...Lockwasher
40	20412-S	...Bolt
41	33845-S	...Nut
42	E1ADKN-5016-A	..Channel L. H.
	E1ADKN-5015-A	...Channel R. H.
43	20452-S2	...Bolt
44	E1ADDN-16605-B	...Ornament (Diesel)
	E1ADKN-16605-C	...Ornament (Petrol and V.O.)
45	E1ADKN-17006	...Box
46	E04A-16603	...Pad
47	E1ADKN-16644	...Handle
48	33798-S	...Nut
49	†E1ADKN-16312-A	...Mudguard R. H.
	‡E1ADKN-16312-B	...Mudguard R. H.
	♯E37-PA-9	...Mudguard R. H.
	†E1ADKN-16313-A	...Mudguard L. H.
	‡E1ADKN-16313-B	...Mudguard L. H.
	♯E38-PA-9	...Mudguard L. H.
50	72026-S	...Split pin
51	74097-S	...Clevis pin
52	E1ADKN-416	...Bracket
53	20410-S	...Bolt
54	34808-S	...Lockwasher
55	44731-S	...Washer
56	E1ADKN-434	...Buffer
57	33798-S2	...Nut
58	20327-S	...Bolt
59	E1ADKN-400	...Seat
60	44734-ES7/8	...Washer
61	355471-S2	...Bolt
62	E1ADKN-16473	...Platform L. H.
	E1ADKN-16472	...Platform R. H.
63	E1ADKN-16487	...Support L. H.
	E1ADKN-16486	...Support R. H.
64	E1ADKN-7624-B	...Stop

FRAME AND BODY

† Less Electric Lights ‡ With Single Rear Lamp ♯ With Twin Rear Lamps

Printed by
HOWARD, JONES, ROBERTS & LEETE, LTD.,
LONDON - - - - ENGLAND

Ref. Y5124/115